2025 EDITION

RACE EXPERIENCE RULES

Updated through April 29, 2025

Sports Car Club of America, Inc.
Road Racing Department
6620 SE Dwight St.
Topeka, Kansas 66619
(800) 770-2055
www.scca.com

roadracing@scca.com
©2025 Revised
SPORTS CAR CLUB OF AMERICA, INC.

All rights reserved. No part of this book may be reproduced or transmitted in any form or by means electronic or mechanical, including photocopying, recording, or by any information storage or retrieval system, without permission in writing from the Sports Car Club of America or as allowed in this book.

All SCCA Brands and Trademarks can be found on the Sports Car Club of America website and may be used throughout these rules without the circle R.

1. RACE EXPERIENCE OVERVIEW

1.1 SCCA Defined

The **Sports Car Club of America, INC. (SCCA)** is a 501(c)4 nonprofit organization incorporated in the state of Connecticut, dedicated to owning, operating, and preserving sports cars; arranging and regulating sports car events and exhibitions; encouraging safe conduct on public highways; and developing technical information relevant to these purposes.

1.2 Race Experience: The SCCA Race Experience program is focused on providing an opportunity to engage in SCCA wheel-to-wheel racing at lower peak levels of performance and pressure than an SCCA Road Racing Events and, while under observation focused on education and the best experience for all.

1.2.1 Club Race Experience (CRE)
CRE events are single-driver wheel-to-wheel competitions/events. Events run as a CRE include short format races and sessions without driver changes, or regular pit stops as part of the strategy.

1.2.2 Endurance Race Experience (ERE)
ERE events are wheel-to-wheel competitions which allow multiple drivers to share a car in an event which tests the durability of equipment and participants, while making pit stops, and driver changes part of the strategy and format.

1.3 Assumption of Risk

SCCA wheel-to-wheel racing is a dangerous sport that can result in serious injury or death. Participation in all aspects of the sport is voluntary. The ultimate responsibility for participant and vehicle safety lies with the participant, vehicle owner, driver, and crew members.

The participant also acknowledges that by participating in the event, the participant may suffer bodily injury or death, or loss or damage to property. The participant further acknowledges that the participant has voluntarily assumed the risk of bodily injury or death, or loss or damage to property or resources and waives any claims for bodily injury or death, or loss or damage to property or resources against SCCA, its directors, officers, employees and agents, event officials, event sponsors, racetrack operators, and other participants and discharges such persons and entities from responsibility for such losses.

1.4 Participant Conduct

1.4.1 All participants, including competitors, officials, crew, and guests are expected to act appropriately and honor the SCCA Welcoming Environment Statement. Behavior strictly prohibited at SCCA Race Experience Events include, but are not limited to bribery, fraud, reckless actions, refusing to cooperate with officials and/or competitors, acting inappropriately and threatening or committing physical violence.

1.4.2 Alcohol, Drugs and Narcotics

A. No driver, entrant or crew member may consume alcohol until all practice, qualifying or racing for their class is finished for the day. No official may consume alcohol until their duties have been completed for the day. Anyone who has consumed any alcohol on the day of an event—other than following the conclusion of their activities—shall not participate on that day, may be excluded from the balance of the event and may be penalized as specified. Alcohol may not be consumed in the pits until after all of the

day's on-track activities are concluded.

B. The use at an event by any participant of any Federal Schedule 1 controlled substance (including marijuana), or other drug that affects the ability of the participant to safely participate in the event or may otherwise adversely affect the safety or integrity of the event, is specifically prohibited. Certain prescription and non-prescription medicines may also impair performance, so competent medical authority should be consulted prior to using such medicines and participating in the event. Any participant who violates this prohibition may be penalized as specified.

C. Drivers and entrants are responsible for the behavior or their crew and guests. Persons who sign the waiver for minors are responsible for the behavior of those minors.

1.4.3 Unmanned Aircraft (UAV/Drones)
Subject to Federal (FAA), State, Local laws, the rules imposed by the venue and with the approval of the sanctioning SCCA Region or SCCA, Inc. Program Manager (known as event organizer), Unmanned Aircraft Vehicle ("UAV" or "Drone") operators/owners must provide proof of FAA certification and provide a certificate of insurance (COI) evidencing $5M of primary liability insurance naming SCCA and the venue as additional insureds. Recreational use of UAVs is prohibited. Drone operators must comply with FAA regulations in accordance with Title 14 Code of Federal Regulations Part 107, including those for proximity to people, restricted property, and public roads. The sanctioning SCCA Region or SCCA, Inc. Program Manager must indicate approval in the online sanction system and upload the FAA Certification and COI to the event documents.

1.5 Media Rights

Participants agree to permit the Sports Car Club of America Inc., and their assigns (including but not limited to series sponsors, promoters/organizers of an event), free of any charges duties or fees, to use, license, reproduce, have reproduced, show, have shown, without limitation in space or time, all soundtracks, photographs, drawings, trademarks, films, video, and video pictures concerning competitors, their drivers, teams, or cars involved in the event(s) on any medium whatsoever that is sourced by or under the authority of SCCA (excepting medium submitted by a participant as part of a formal protest or appeal procedure) for any documents, reports, coverage, broadcast, program, publication, video game or model production, software, etc. whether past, present or future. The entrant further acknowledges and agrees that SCCA may freely assign or license its rights to a third party.

2. RACE EXPERIENCE DRIVERS

2.1 Driver Eligibility

SCCA Race Experience Events are designed to be an access point for wheel-to-wheel racing open to drivers of all experience levels including those without formal racing licenses or wheel-to-wheel experience.

2.1.1 Race Experience Driver Eligibility

A. Age of Majority (Generally 18+ but may vary – check local laws.)

1. Current Annual Membership in the SCCA.
2. Valid government-issued driver's license.

B. Minor Driver Eligibility
The SCCA defines a Minor as an individual between 14 years and the age of majority as determined by the law in the state of the individual's residence (typically 18 years old, but it may vary).

1. Current Annual Membership in the SCCA.
2. A Minor applicant must complete a digital Annual Minor Waiver available at my.scca.com → Online Store → License and Waivers. Parents/Legal Guardians must each complete an Annual Waiver Minor Parental Consent available at my.scca.com → Online Store → License and Waivers. These documents must be completed each calendar year until the Minor achieves the age of majority in their state.
3. Minor drivers not eligible for their state driver's license must have a valid SCCA Novice Permit or Full Competition License.
4. Minor drivers who are eligible for their state driver's license must meet the requirements for their state-issued driver's license or all required minor documentation and the Novice Permit or Full Competition License.

2.2 Physical and Medical Fitness

Drivers must not have any known medical conditions or be under the influence of any medication that would cause them or others undue risk and be able to handle the physical and mental demands of competition for the length of a session for each session of the event.

2.2.1 The functional suggested requirements of a driver in a competition automobile are:

A. Ability to rapidly operate acceleration, braking, and steering mechanisms/systems.

B. Vision: distant vision correctable to 20/40 each eye, ability to distinguish basic colors, and peripheral vision to 70 degrees in the horizontal median for each eye.

C. Should have minimal chance of sudden incapacitation from any disease process.

D. Ability for rapid mental activity, problem solving, and decision-making.

E. Ability to maintain an aerobic level heart rate for at least 20 minutes, and in Endurance Races, up to multiple hours.

2.2.2 The environment the driver may operate in is:

A. Temperature extremes from 0 degrees (F) to 120 degrees (F) for long

periods of time.

B. Smoke, fumes, vapor, caustic chemicals, and dust.

C. Loud noise and vibration.

D. Increased potential for exposure to fire.

2.3 Driver Expectations/Licensing

2.3.1 Driver Expectations

A. Race Experience events have a primary goal of providing the imperative mutual respect needed for clean racing that can be celebrated by drivers, teams, and officials.

B. Overly aggressive driving and incidents – including spins, offs, and contact of any kind should result in a consultation with a driver coach regardless of "fault" and penalties ranging from black flags to disqualification/exclusion may be set by the officials and are not protestable.

C. Drivers who are excluded from an event due to overly aggressive driving/repeated loss of control should be put on probation for 13 months, and if they are excluded again during that period, should be excluded from the program for 13 months.

2.3.2 Licensing

SCCA Race Experience Drivers are not required to have a racing license, but through their required SCCA Membership will have their experience recorded.

2.3.3 Educational Component

A. Race Experience events will have an instructional component for drivers starting their road racing or sprint racing journey.

B. Race Experience events should be part of an Alternate Drivers School or licensing path.

2.4 Required Driver's Safety Equipment

All required driver's safety equipment must be worn at all times while on track. The participant agrees that the participant always bears the ultimate responsibility to ensure the safety of participant's driver's safety equipment, and compliance with all SCCA rules, regulations, and agreements, including but not limited to those contained in the Race Experience Rules.

2.4.1 Annual Inspection

At or before the first event of the calendar year, all driver's safety equipment will be inspected by a licensed scrutineer. The scrutineer performing the inspection shall affix a dated, non-removable sticker or decal on the side of helmets to indicate that all driver's safety equipment has been inspected and is in compliance with this section. This sticker or decal, which shall be placed on the helmet in a manner such that it is visible from outside the car with the driver seated and belted in the normal driving position, may be checked by grid or scrutineering personnel on the starting grid. The presence of other externally visible driver's safety equipment (gloves, balaclava, and suit) may also be checked by grid or scrutineering personnel on the starting grid.

2.4.2 Reinspection

Throughout the racing season, a check of the condition and legality of driver's safety equipment should periodically be done by scrutineers in impound by group or class with the concurrence of the Race Director or Chief Steward.

2.4.3 Required Equipment

The following required equipment shall be in good condition and free of defects, holes, cracks, frays, etc.

A. Driving suits that effectively cover the body from the neck to the ankles and wrists. One-piece suits are highly recommended. All suits must bear an SFI 3.2A/1, SFI 3.4 or higher certification label or an FIA 1986 Standard, FIA Standard 8856-2000, or FIA Standard 8856-2018 homologation label. Underwear of fire-resistant material shall be used but is optional with suits carrying an FIA Standard 1986 Standard or FIA Standard 8856-2000 label or SFI 3-2A/5 or higher (e.g., /10, /15, /20) certification label.

B. Crash helmets approved by the Snell Foundation with Snell sticker 2015 or later Special Application SA2015/SAH2015, or by the SFI with a SFI Sticker SFI 31.1/2015 or newer, or by the FIA standard 8859-2015 or FIA 8860-2010 or newer. SFI labeled helmets must have a year printed on the label to be valid. Each driver's helmet shall be labeled with a minimum of the driver's name.

1. Freon based total loss helmet cooling systems are not allowed.

C. The use of a head and neck restraint system that has been certified in accordance with SFI 38.1 or FIA 8858-2002 or 8858-2010 is required; an SFI 38.1 or FIA 8858-2002 or 8858-2010 label must be properly affixed to the device. Accident damaged helmets should be sent by the driver or a representative to the Snell Memorial Foundation, 3628 Madison Ave., North Highland, CA. 95660 (ph.) 916-331-5073 (attn. Edward B. Becker). Details of the accident should be included.

D. Gloves made of leather and/or accepted fire-resistant material containing no holes.

E. Socks made of accepted fire-resistant material.

F. Face coverings (balaclavas) of accepted fire-resistant material for drivers with beards or mustaches. Hair protruding from beneath a driver's helmet shall be completely covered by fire resistant material. As an alternative to balaclavas, a full helmet skirt of accepted fire-resistant material may be used. Double-layer balaclavas are recommended. If balaclavas are used voluntarily, they shall be of accepted fire-resistant material.

G. Goggles or face shields, preferably made of new impact resistant materials, for drivers of open cars.

H. A driver's restraint system meeting SCCA standards (See Section 3, 2.1.G.2: Driver's Restraint System) shall be used at all times while on the track.

I. Shoes, with uppers of leather and/or nonflammable material that at a minimum cover the instep. Ventilation pinholes by the manufacturer are allowed.

3. RACE EXPERIENCE VEHICLES

These are the SCCA Race Experience Vehicle Technical and Safety Specifications – these will cover Vehicle Eligibility and "Must Do's" (Required modifications/safety gear). Meaning, this is what you "Must Do" in order for a vehicle to be eligible.

Generally, a vehicle eligible to run in other major Road Racing or Endurance Racing programs will also be eligible for SCCA Race Experience Events and it is the intention of these rules to accommodate those vehicles coming from other major series and events.

Even with those intentions, there are some specific requirements or performance capabilities that may not match. (e.g., one major series does not require window nets – SCCA Race Experience does.) Competitors are cautioned to read these rules to find those specifics. The final determination of eligibility rests with Officials at Race Experience Events.

3.1 Vehicle Eligibility

SCCA Race Experience vehicle eligibility is designed to be inclusive, with a broad range of modifications allowed to mass-produced production vehicles.

SCCA Race Experience Events are open to any vehicle that:

3.1.1 Meet General Performance Limits

Generally, vehicles should not be faster per lap than SCCA Sprint Road Racing Touring 2 class or about a 7:1 HP to weight Ratio. While the eligibility guidelines do not specifically limit potential, any event classing should render vehicles with performance capabilities beyond the intended limits ineligible for competition.

3.1.2 Production-Based Vehicles

SCCA Race Experience is primarily intended to be for production-built, passenger vehicles modified for motorsports where the chassis must have started as a mass-produced automobile, available for retail sales on showroom floors and at dealerships.

A. Production-Vehicle exceptions

1. SCCA Spec Racer (Any generation, in Road Race compliant trim, or within Road Racing compliant performance limits.)
2. Replica Production Cars (E.g., Factory Five Spec Racer)
3. Tube Frame GT/Production-based cars, not to exceed 2.9 liters naturally aspirated, 1.5 liters forced induction 1.95 liters rotary or 175KW electric.
4. The following SCCA GCR-Compliant Formula Cars/Sports Racers may be run in specific SCCA Race Experience Events but may not be run on track at the same time with the production-based classes.
    a. Formula Enterprises/Formula Enterprises 2
    b. Formula F
    c. Formula 600
    d. Formula Vee
    e. GCR-Legal Formula cars/Sports Racers with speeds not exceeding those of FE2.

3.1.3 Have the following passenger-car design considerations:

A. Have at least four wheels, grouped in equal sets of half the vehicle wheels

on each side.

B. Must not have a high center of gravity. Potentially unstable vehicles with a high center of gravity–determined by whether they are wider than they are tall–are excluded from SCCA Race Experience. Width is the average track width of the vehicle, and height is measured from the ground to the highest point. Extra caution should be exercised with non-traditional track vehicles (e.g., trucks or SUVs.)

3.1.4 Meet Safety Requirements

All SCCA Race Experience Vehicles must meet all safety standards outlined in this document, section 3.2. titled, "Must Do's and Recommendations."

A. SCCA Logbooked Race Cars

Some SCCA logbooked vehicles may have exceptions in their rules which do not meet these requirements. (E.g., some Touring Cars do not require a master switch, and some classes do not require some of the bracing outlined in Section 3.2 Section F.) Those vehicles, with logbooks, may participate in Race Experience Events provided they meet performance limits.

3.1.5 Vehicle Documentation

A. Vehicle Logbooks

Vehicles may have SCCA Logbooks, and annual inspections are permitted. Vehicle Logbook may only be issued by a Nationally licensed Technical Inspector.

1. If a car is protested or inspected during an event and found to be non-compliant, the results of this protest or inspection must be noted in the logbook by the Race Director or their designee.
2. If a car is involved in an accident or is damaged because of mechanical failure, the damage must be noted in the Vehicle Logbook by the accident investigator or Chief Technical Inspector.

B. Vehicles Without Logbooks

Vehicles without logbooks may participate in SCCA Race Experience events but must be inspected before participating in any on-track session.

3.2 Must Do's and Recommendations

These are the mandatory and recommended items for a vehicle in SCCA Race Experience Events. This means to participate, vehicles must have these items, or these items are recommended.

Primarily, these are safety requirements and recommendations rather than performance-enhancing competition allowances.

If an item says "must" the vehicle or driver must have that item meeting the listed specifications. If it says "should" or "recommended" then those items are recommended but not required.

3.2.1 SCCA Race Experience Vehicles:

Vehicles Eligible for SCCA Race Experience events either must, or are recommended if noted, to have the following modifications and features.

A. General

1. Appearance

We understand there will be a wide range of visual presentations and the only thing we require is vehicles not have structural damage or significant rust which can affect your safety or the safety of other

participants.

2. Numbers, Class Letters and Series Decals
   Each car shall carry identification markings per the sections listed below:
   a. All vehicles must display numbers on body panels on both sides, which must be readable by Timing & Scoring, Course, and Grid workers at all times. Vehicles may include class letters, and if included they should be positioned adjacent to the numbers. When used, class shall be represented by the upper-case abbreviated form rather than be spelled out.
   b. It is recommended to have a number on the front of the car.
   c. All numbers and any class letters should use the same typeface and the same color, and this color must provide adequate contrast to the background color.
   d. Generally, numbers should be a minimum of 8 inches (20.5 cm) high with a 1.25 inches (3.25 cm) stroke. Class letters must be a minimum of 4 inches (10.25 cm) high with a 0.75 inch (2 cm) stroke. When used, the height of the class letters should be between 25% and 75% of the height of the numbers. Stroke width should be at least 10% of the height.

      Note: We're using the word "should" here because we don't want anyone to fail tech because their numbers are 7.75 inches tall but otherwise very readable. But please, make some big readable numbers. Make sure they are heavy contrast and easy to read when you're going 100 mph, 100 feet away. Numbers are awesome. Bigger numbers are awesomer. Number plates with easy-to-read numbers are wicked cool as well. Peeling those little numbers off your neighbor's mailbox as you're leaving for the event and putting them on the car is not cool for so many reasons. Let us know you love being seen on track.
   e. SCCA and Event Logos
      Each entered car participating in an event should display an official SCCA logo on the sides or front of the car unobstructed. Road Racing or other program logos with "SCCA" or the Wire Wheel are acceptable, but the Official SCCA Logo Decal is preferred.

Item #2624.1 - White Item 2624.2 - Black Item 2624.3 - Red

Official SCCA Logo Decal – Can be found in the Member Account Portal

   i) Additional sponsor and/or event specific decals may also be required; refer to event info/supplemental regulations.
   ii) Required decals should be provided free of charge at the event.

iii) If required decals/graphics listed are not available at the event, this requirement is waived.

f. Alternate series logos and decals
We're not going to be sticklers about other sanctioning body decals showing up, but know that if they are on your car you have very little chance of being famous on our website. Or, we may photo-edit the logo of our choice onto that spot on your car.

3. Cameras/Recording
It is strongly recommended that all cars be equipped with a forward-facing video camera, recording at all times when on track. The video card shall be made available to the series upon request, including during the competition. Competitors should have spare memory cards available in the event a video card is collected by the Race Director or Driver Coach for review during an event.

The mounts for video / photographic cameras must be of a safe and secure design. The body of the camera or recording unit that weighs more than 8 oz shall be secured at a minimum of 2 points on different sides of the camera body. Suction cups or elastic mounts are not permitted as primary means of securing a camera. If a tether is used to restrain the camera, the tether length shall be limited so that the camera cannot contact the driver.

B. Chassis/Interior/Exterior

1. Chassis
Unless otherwise listed in eligibility exceptions, vehicles must use a production chassis without modification which changes its shape or basic original vehicle dynamics.

The intent of this rule is to keep entrants from participating in a tube frame car or effectively creating a tube-frame car that isn't allowed, and to prevent weight reduction and body modifications which compromise strength or otherwise substantially change the construction of the vehicle. (E.g., building a "ship in a bottle" tube-frame car would not be allowed, and cutting, bracing, tubbing, clipping, etc. will be evaluated with much greater scrutiny.)

2. Interior

a. Supplemental restraint systems (SRS), passive restraint systems must be removed or disabled, and any item not secured in place by original fasteners such as bolts, nuts, snaps, straps, etc. (e.g., jacks, spare tire covers, tonneau covers) must be removed.

Any item which can be secured in place by original fasteners such as bolts, nuts, snaps, straps, etc., may be removed. (E.g., a spare tire, tool kit.)

b. All installed interior components must be attached to/contained in the chassis in such a way as to be able to withstand 25g deceleration. Any sharp edges shall be covered, padded, protected, etc. to prevent injury to driver, crew, course workers and officials.

c. Firewalls and Floor
Firewall and floor must prevent the passage of flame and debris into the driver's compartment. Any holes in the firewall must be

of the minimum size for passage of controls and wires and must be completely sealed. Belly pans/floor shall be vented to prevent the accumulation of liquids, except composite/honeycomb structures.

d. Mirrors or screens (e.g., rear-view camera system) must provide driver visibility to the rear of both sides of the car.

e. Fuel, Oil and Water Lines
All fuel, oil, and water lines, including gauge and vent lines, that pass into or through the driver/passenger compartment, shall be of steel tube or metal braided hoses or protected by a wall–like bulkhead container (Cool suit lines are exempt).

The driver shall not be exposed to header tanks. Heat shielding between fuel/oil lines and fuel/oil filters and exhaust components is strongly recommended.

f. Hand Controls
Hand controls are permitted.

g. A roll cage meeting the specifications in Section F must be installed/constructed.

3. Bodywork

a. Body panels shall be securely mounted. Fender skirts and hub caps shall be removed. The hood and engine compartment shall be securely fastened. Hood fasteners must be removable with simple tools; no fastener requiring a key to open it is permitted.

b. If bumper cores and crush structures are removed, they must be replaced with a structure designed to perform the same function.

c. It is recommended that all vehicle doors be able to be opened from both inside and outside of the vehicle.

4. Convertible/T-Tops/Targa-Tops

a. Convertible soft tops and attaching hardware including boot covers shall be completely removed.

b. Movable/removable metal or composite panels in the roof may be either removed or positively secured in the closed position. Drivers of cars without a sunroof panel shall wear arm restraints.

5. Tow Hooks/Tow Straps/Towing Eyes
All cars must have a towing eye or strap, sometimes known as a "tow hook" front and rear, that does not dangerously protrude from the bodywork when the car is racing, to be used for flat towing or hauling the vehicle.

These towing eyes or straps shall be easily accessible without removal or manipulation of bodywork or other panels. The minimum ID of the tow eye is two (2) inches. The required tow eyes must be strong enough to tow the car from a hazard such as a gravel trap.

a. The front tow eye may be mounted at any location forward of the windshield, and a hole may be cut in the bodywork for the sole purpose of clearing a protruding tow eye.

b. Open top cars may use their exposed roll bar for towing purposes. Closed top cars may mount the front tow eye in the

driver/passenger side window openings, but it must be attached to the forward roll cage down tube as close to the base of the windshield as possible, and there shall be one on each side of the car. A removable towing eye carried inside the car is not acceptable, except in Formula and Sports Racing cars. In addition, for open-topped cars, Formula and Sports Racing cars, if the main hoop is faired in, the fairing shall have access holes to allow the insertion of a bar or strap to allow the car to be lifted by a wrecker.

c. Rear tow eyes must be accessible rearward of the rear axle centerline.

C. Windows/Glass

1. Windshields and windows may be OE-equivalent glass or polycarbonate. Any polycarbonate windows or windshields must be adequately fastened. Forward-facing polycarbonate windshields must be a minimum thickness of 3/16" and feature a reinforcement to prevent collapse. Forward-facing OE-equivalent glass windshields must be safety glass, must be installed per factory recommendations, and may be reinforced.

2. Detachable roof panels (sunroofs) may be removed. All glass panels in the roof must be removed. Movable or removable metal or composite panels in the roof may be either removed or positively secured in the closed position. Drivers of cars without a sunroof panel shall wear arm restraints.

3. Windows must be clear or uncolored, except if no factory or aftermarket clear windows are available. Officials may require the replacement of windshields that are considered a safety hazard.

a. All closed cars shall run with both front door windows fully open.

b. If allowed as a supplementary class at an event, factory (OEM Manufacturer) and FIA GT3/GT4, race prepared cars with fixed Lexan front door windows may race with windows as delivered and noted on the Spec Line.

c. Windshield Wipers
Any car equipped with a windshield must be fitted with at least one effective windshield wiper assembly, which must be in working order throughout the event.

D. Exterior Lighting systems

1. Events running into darkness may require the use of headlights and tail driving lights. Utilizing stock assemblies, or upgraded stock assemblies, is the easiest way to accomplish this.

2. There must be at least one functioning red brake light at all times, except for Formula cars and Sports Racers where not required.

3. When equipped, headlights shall be retained and utilized during rain or low light situations as directed by race control. When required, vehicles must have a minimum of one functioning driving light/rain light on the rear of the vehicle.

4. Auxiliary headlights may be allowed by the event information or supplemental regulations.

5. Exposed glass headlights must be taped.

E. Exhaust system

1. Exhaust systems shall be directed away from the body and shall terminate at or behind a point which is equidistant from the front and rear hubs.
   a. It is recommended to include one (1) muffler at minimum.
2. If the exhaust system is routed in such a way that damage to it could cause hot exhaust to contact any part of the fuel system, there should be a metallic heat shield protecting the fuel system components.
3. Cars must be compliant with the SCCA Sound Control limit of 103dB or the track-mandated limits, whichever is lower.

F. Roll Cage

All cars must utilize a roll cage with a minimum of six (6) attachment points to the chassis and compliant with the following specifications. These specifications apply to all vehicles registered (issued an SCCA logbook or presented for an event without a logbook) after 1/1/08.

Cars with an SCCA Logbook registered before 1/1/08 may compete with their previous roll cage as specified in the SCCA GCR Appendix I or comply with the following specifications.

Cars registered as Production class cars prior to 1/1/08 may continue to use their existing roll cage per the SCCA GCR Appendix J or comply with the following specifications.

1. Definition
   The roll cage consists of the main hoop, front hoop, side protection, and braces as specified in these rules.
2. Main Hoop
   The main hoop (behind the driver) must be the full width of the cockpit for all cars. It must be one continuous length of tubing with smooth bends and no evidence of crimping or wall failure. The main hoop must maintain a single plane.
   a. On all closed cars, the main hoop must be as close as possible to the roof and "B" pillars.
   b. Open cars without the windshield frame may use an asymmetric main hoop. The main hoop must be full width to the passenger side of the car. On the passenger side of the car the hoop must be at least as high as the top of the rear corner of the door as illustrated in figure 9.

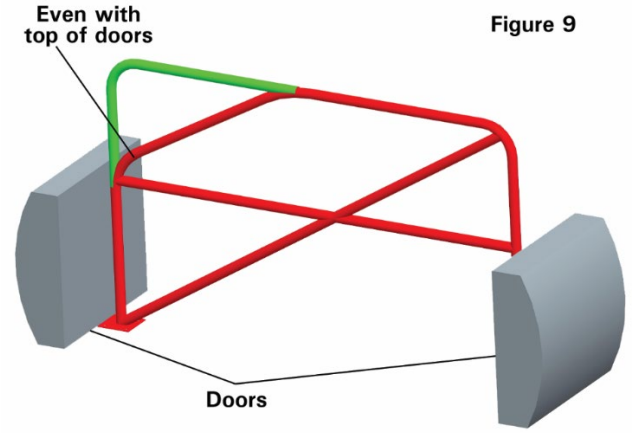

Figure 9

c. The main hoop must be high enough that a straight line drawn from the top of the main hoop to the top of the front hoop would pass over the driver's helmet and steering wheel when the driver is seated in the normal driving position. Additionally, the top of the main hoop must be at least two (2) inches above the driver's helmet as illustrated in figure 10.

Figure 10

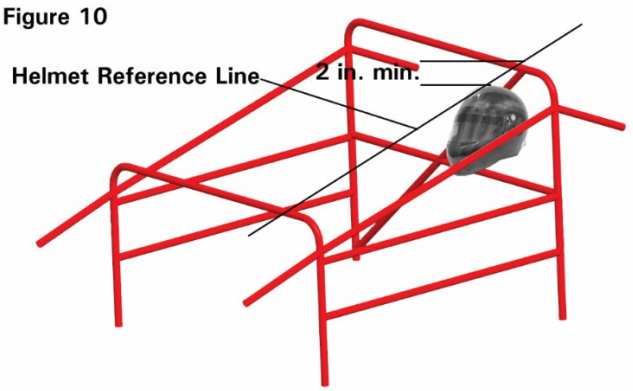

d. On open cars retaining the windshield frame the main hoop must be full height for the entire width of the hoop. The top of the main hoop must be at least two (2) inches above the driver's helmet as illustrated in figure 11.

Figure 11

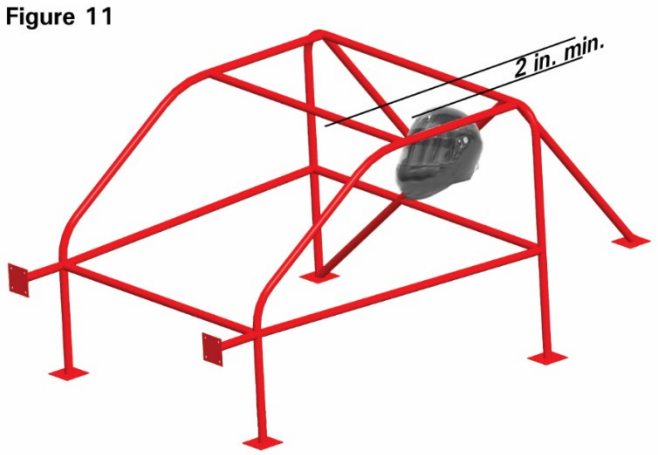

e. Main Hoop Bracing
Main hoops shall incorporate a diagonal brace. The brace shall either be in the plane of the main hoop or extend from the top of one rear brace (described in 2.1.D.3.f) to the bottom of the opposite rear brace. Automobiles with mid-mounted engines can have the lower mounting point attach to the frame of the automobile within six inches of the main hoop. In the case of braces in the plane of the main hoop, the brace must span at least 50% of the width of the main hoop, and at least 75% of the height of the main hoop as shown in figure 12.

Figure 12

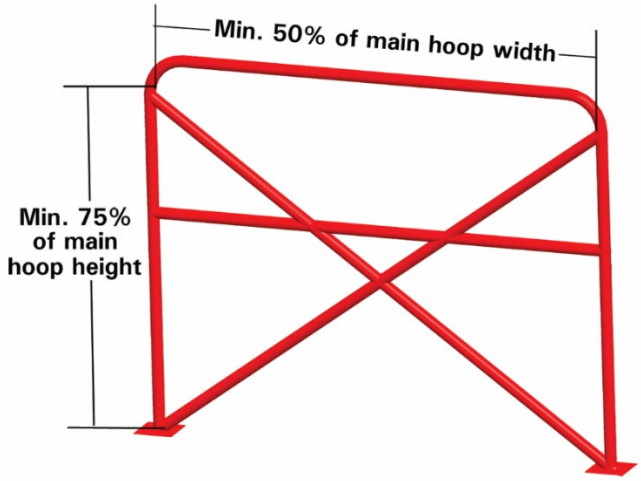

f. Cars must incorporate a main hoop horizontal brace at the approximate level of the driver's shoulders but not lower than the shoulder belt mounting point as described in section 2.1.D.2 Driver's Restraint Systems. If a double diagonal "X" brace is used in the plane of the main hoop, a half-width horizontal brace may be used behind the driver's seat to mount the seat back and shoulder harness as shown in figure 13.

Figure 13

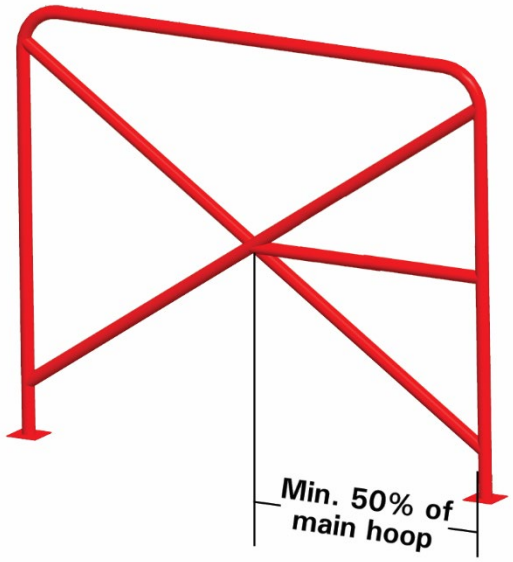

g. Cars must have two (2) braces extending to the rear from the main hoop and attaching to the frame or chassis. Braces must be attached as near as possible to the top of the main hoop (not more than six (6) inches below the top), and at an included angle of at least 30 degrees.

h. Open cars must have two (2) braces extending forward from the main hoop and attaching to the front hoop, not more than six (6) inches below the top of the front and main hoop. It is recommended that the front and rear braces attach to the main hoop as close as possible to each other.

i. On cars where the rear window/bulkhead prohibits the installation of rear braces (e.g., Honda del Sol), the main hoop shall be attached to the body by plates welded to the cage and bolted to the stock shoulder harness mounting points.

   This installation design must incorporate a diagonal bar connecting the top of the main hoop to the lower front passenger side mounting point (Petty bar).

   Alternatively, the rear window may be removed and a clear, Lexan replacement installed. The rear cage braces may pass through this replacement window and through the engine cover or bodywork to allow connection to the frame or unibody.

3. Front Hoop

Roll cages may be of two designs, low front hoop or high front hoop. All closed top cars and cars that retain the windshield frame must have a high front hoop design. Open cars may incorporate a high or low front hoop design. High front hoops are also referred to as side hoops.

a. Closed cars

   The front hoop (side hoop) must follow the line of the A-pillars to the top of the windshield and be connected by horizontal bars to the top of the main hoop on each side (as close to the roof as possible). Instead of a single front hoop, two side hoops (down tubes) may be used. Alternatively, a top "halo" hoop following the roof line from the main hoop to the windshield with forward down tubes following the A-pillars to the floor may be used. Regardless of which one of the two approved tubing configurations there shall be a tube connecting the two A-pillar tubes at the top of the windshield.

b. Open cars

   The height of the front hoop (per section 2.1.D.4.a) must be consistent across the full width of the cockpit.

c. Front Hoop Bracing

   It is recommended that all open cars with a high front hoop and all closed cars incorporate a horizontal front hoop brace at the approximate level of the dashboard. (Sometimes called a "dash bar.")

d. It is recommended that one tube must extend, from each front down tube, forward to the firewall.

e. Roll Cage Bracing that goes through the front fire wall, or ties into or shock tower/suspension mounts is permitted, but at some point in the future will likely incur a competition adjustment in the National classing rules.

4. Side Protection

Two side tubes connecting the front and main hoops across both door openings must be used. Tubes that are welded to any part of the same mounting plate are considered to be connected to one another (see 2.1.D.6 below). NASCAR-style side protection or one bar bisecting another to form an "X" is permitted. Door side tubes may extend into the front door.

a. The stock side impact beams may only be removed when NASCAR style door bars are installed.

5. Roll Cage Attachment Points

The roll cage must attach to the vehicle structure within the passenger compartment in a minimum of six (6) points. More points may incur competition adjustments or be disallowed from competition if it creates an unauthorized tube-frame car.

The roll cage may not pass through any structural member, including the firewall, except Miata rear main hoop braces may pass through the package tray.

a. Mounting Plates
Mounting plates welded to the structure of the car must not be less than .080 inches thick and no more than 0.25 inches thick.

b. The thickness of mounting plates bolted or riveted to the structure of the car must not be less than the thickness of the roll hoop or brace that they attach to the chassis and must be backed up with a plate of equal size and thickness on the opposite side of the chassis panel.

c. Fasteners for bolted or riveted mounting plates must be Grade 5/Metric 8.8 or better with a minimum diameter of 5/16 inch.

6. Tubing

a. Seamless or DOM mild steel tubing (SAE 1020 or 1025 recommended) or alloy steel tubing (SAE 4130 or T45), or Docol R8 tubing must be used for all roll cage structures. Alloy and mild steel tubing may not be mixed. ERW tubing is not allowed.

b. The following table shows the minimum allowed tubing outer diameter and wall thickness by vehicle weight:

Vehicle Weight	Tubing Size (inches) (outer diameter x wall thickness)
Up to 1700 lbs.	1.375 x .080
1701 - 2699 lbs.	1.500 x .095 1.625 x .080
2700-3999 lbs.	1.50 x .120 1.750 x .095 2.0 x .080
4000 lbs. and up	1.75 x .120 2.00 x 0.95

c. For purposes of determining tubing sizes, the vehicle weight is as raced without driver, fuel and ballast.

d. The required tubing elements must meet the material minimums set forth above. Optional tubing elements may be any size.

e. The minus variance of tubing wall thickness due to manufacturing tolerances is limited to .010 inch.

f. Either an inspection hole between 3/16- and 1/4-inch diameter must be drilled in a non-critical area of the front and rear hoops, as well as one of the supplemental braces to facilitate verification

of wall thickness; or alternatively, wall thickness may be determined by non-invasive means.

7. Basic Design Considerations

a. All portions of the roll cage subject to contact by the driver must be padded. Padding either must be a minimum 1 inch of material or must meet or exceed SFI 45.1 or FIA 8857-2001 (curved padding), or SFI 45.2 or FIA sports car head rest material (flat padding). Padding that meets SFI/FIA specification is recommended.

b. The roll cage must not have an aerodynamic effect by creating a vertical force.

c. The radius of all bends in the roll cage (measured at centerline of tubing) must not be less than three (3) times the diameter of the tubing.

d. It is recommended that all joints of the roll cage be welded. All welding must include full penetration, no cold lap, no surface porosity, no crater porosity, no cracks, no whiskers, and so forth. Welds shall be continuous around the entire tubular structure. Procedures for welding alloy steel shall be in accordance with accepted industry practice. It is recommended that a certified AWSD1.1 welder do all welding.

e. It is recommended that gussets be used at all joints.

f. Any number of additional tube elements is permitted within the boundaries of the cage structure. Such tube elements may pass through any mandatory or optional bulkhead or panel separating the driver/passenger compartment from the trunk/cargo area/fuel tank/fuel cell area provided the bulkhead is sealed around such tube elements.

g. Removable roll cage bracing is acceptable in one of the following configurations:

   i) If one tube fits inside another tube to facilitate removal, the removable portion must fit tightly and must bottom by design, and at least two (2) bolts must be used to secure each joint. The telescoping section must be at least eight (8) inches long. The minimum bolt diameter is 3/8 inch.

   ii) Removable bracing may incorporate connectors of the double-lug, double ear-type, tapered, or muff-type as shown in figures 14 and 15. The double-lug type must include a doubler, gusset, or capping arrangement to avoid distortion or excessive strain caused by welding. Double ear-type joints must be fully welded at all the mating surfaces.

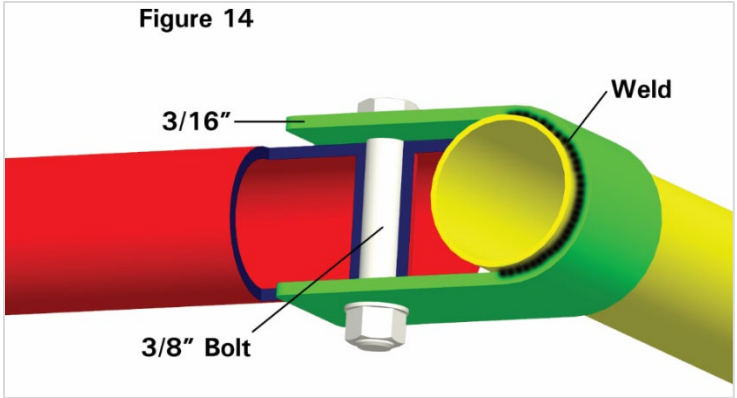

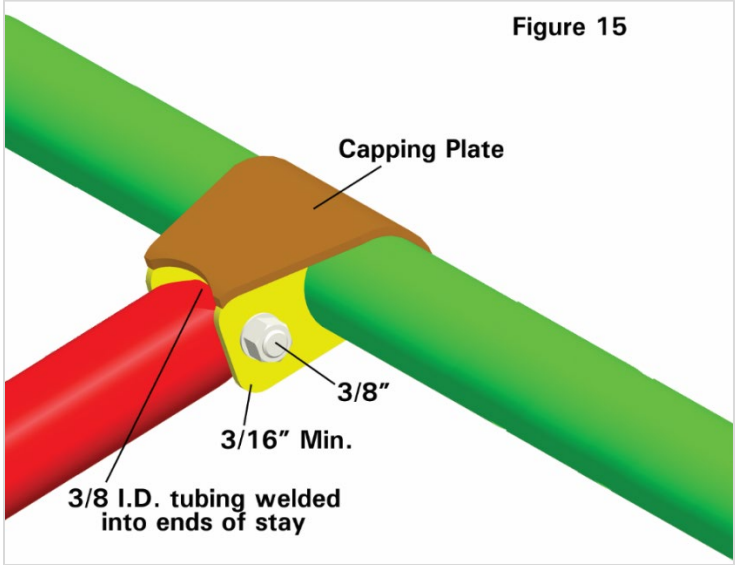

8. Manufacturer Supplied/FIA/IMSA Homologated Roll Cages

a. Cars may compete with FIA or FIA-Approved Test Houses homologated cages provided the cage was built by the manufacturer or a manufacturer designated shop/team and approved for use. Cars must have the FIA identification plate attached to the cage along with a letter from SCCA Technical Services certifying the origins of the car, or confirmation that the cage was certified by an FIA-Approved Test House.

b. Cars may compete with an approved Motorsport UK Roll Over Protection System Certificate. All related engineering drawings and documents shall be submitted to SCCA Technical Services. Cars must have MSA identification plate attached to the cage along with a letter from SCCA Technical Services certifying the cage was approved by the MSA.

G. Seats/Restraint System

1. Seats

The driver's seat shall be a one-piece bucket-type seat and shall be securely mounted to provide fore/aft and lateral support. Passenger seat back, if a folding seat, shall be securely bolted or strapped in place.

a. Mounting structures for racing seats may attach to the floor, cage and or center tunnel. Seat mounting points forward of the main hoop, between the center line of the car and the driver's side door bar and rearward of the front edge of the seat bottom are not considered cage attachment points in classes with limitations on the number of attachments.

b. A system of head rest to prevent whiplash and rebound, and to prevent the driver's head from striking the underside of the main hoop shall be installed on all vehicles. Racing seats with integral headrests satisfy this requirement. The head rest on non-integral seats shall have a minimum area of 36 square inches and be padded with a minimum of one-inch-thick padding. It is strongly recommended that padding meet SFI spec 45.2 or FIA Sports Car Head Rest Material. The head rest shall be capable of withstanding a force of two hundred (200) lbs. in a rearward direction. The head rest support shall be such that it continues rearward or upward from the top edge in a way that the driver's helmet cannot hook over the pad.

c. A passenger seat meeting all the specs of the driver's seat may be installed in the front passenger seat position. The seat may not be occupied during SCCA racing events.

2. Restraint Systems

All drivers in SCCA sanctioned speed events shall utilize either a 5-, 6-, or 7-point restraint harness meeting the following specifications. A 7-point restraint harness is recommended. Arm restraints are required on all open cars including open Targa tops, sunroofs and T-tops. Arm restraints shall not be worn in a manner which limits the ability of the driver to provide visible signals to other competitors while on track. The restraint system installation is subject to approval of the Chief Technical Inspector.

a. The shoulder harness shall be the over the shoulder type. There shall be a single release common to the seat belt and shoulder harness. When mounting belts and harnesses it is recommended that they be kept as short as reasonably possible to minimize stretch when loaded in an accident.

   The shoulder harness shall be mounted behind the driver and supported above a line drawn downward from the shoulder point at an angle of 20 degrees with the horizontal. The seat itself, or anything added only to the seat shall not be considered a suitable guide. Guides must be a part of the roll cage or a part of the car structure.

   i) Only separate shoulder straps are permitted. ("Y" type shoulder straps are not allowed.) "H" type configuration is allowed.

   ii) The single anti-submarine strap of the 5-point system shall be attached to the floor structure and have a metal-to-metal connection with the single release common to the seat belt and shoulder harness.

   iii) The double leg straps of the 6-point or 7-point system may be attached to the floor as above for the 5-point system or

be attached to the seat belt so that the driver sits on them, passing them up between their legs and attaching either to the single release common to the seat belt and shoulder harness or attaching to the shoulder harness straps. It is also permissible for the leg straps to be secured at a point common to the seat belt attachment to the structure, passing under the driver and up between their legs to the seat belt release or shoulder harness straps.

b. All straps shall be free to run through intermediate loops or clamps/buckles.

c. Each seat (lap) and shoulder belt of the harness (5, 6, or 7 points) shall have an individual mounting point (i.e., two for seat belt and two for shoulder belt minimum). 6- or 7-point system anti-submarine straps may share a mounting point with one or both seat (lap) belt(s). The minimum acceptable bolts used in the mounting of all belts and harnesses is SAE Grade 5/Metric 8.8. Mounting hardware, including eye bolts, as provided by the belt manufacturer, may also be used for mounting belts and harnesses.

d. Where possible, seat belt, shoulder harness, and anti-submarine strap(s) should be mounted to the roll structure or frame of the car. Where this is not possible, large diameter mounting washers or equivalent should be used to spread the load. Bolting through aluminum floor panels, etc., is not acceptable. Holes in the roll cage to accommodate the installation of the harness must be bushed and welded completely.

e. All driver restraint systems shall meet one of the following: SFI specification 16.1, 16.5, or FIA specification 8853/98, 8853-2016 or 8854/98.
    i) Restraint systems meeting SFI 16.1 or 16.5 shall bear a dated SFI Spec label. The certification indicated by this label shall expire on December 31st of the 5th year after the date of manufacture as indicated by the label. If for example the manufacture date is 2014 the fifth year after the date of manufacture is 2019. SFI labels, with expiration dates, expire on December 31st of the labeled expiration date.
    ii) Restraint systems homologated to FIA specification 8853/98 and 8854/98 will have a label containing the type of harness designation ('C-###.T/98 or D-###.T/98) and date of expiration which is the last day of the year marked. All straps in this FIA restraint system will have these labels.
    iii) If a restraint system has more than one type of certification label, the label with the latest expiration may be used.

f. Harness Threading: Assemble in accordance with manufacturer's instructions. If no manufacturer instructions are given, use the methods shown in Figures 2-6.

g. Snap-in mounting clips must be pinned to help prevent inadvertent opening of the clip if the manufacturer has provided

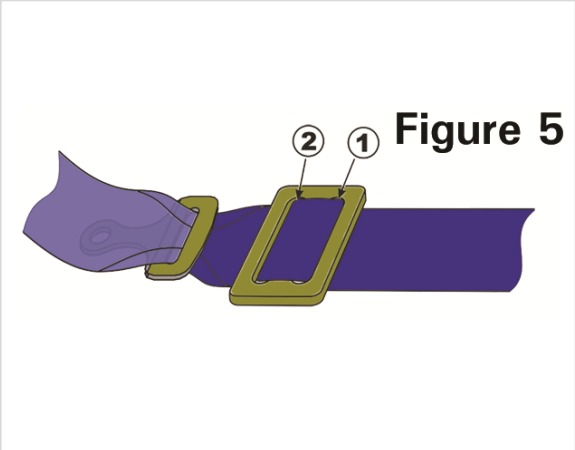

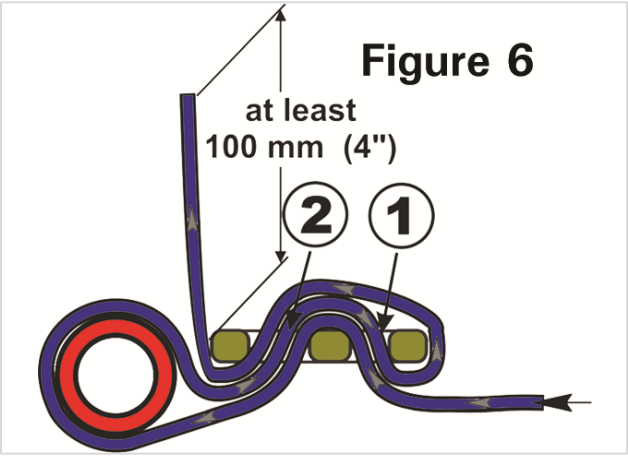

a hole for such purpose.

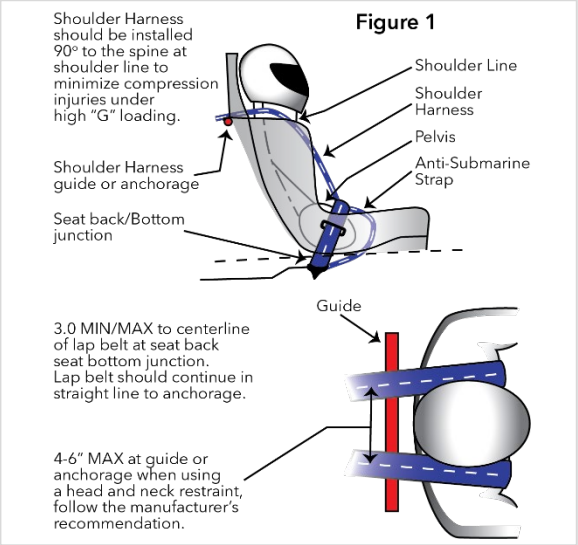

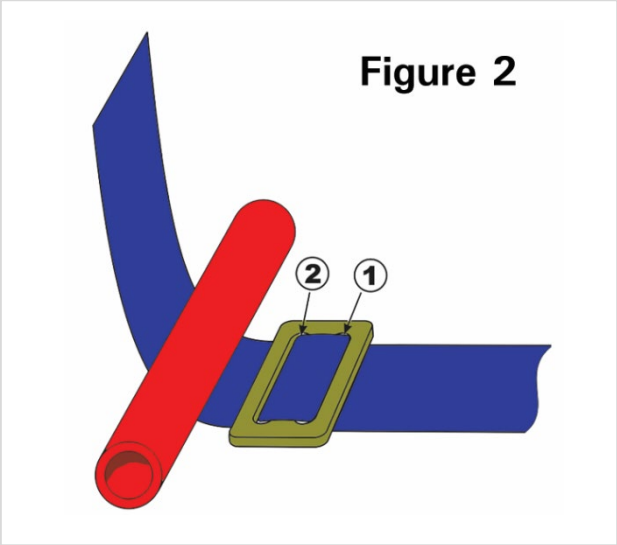

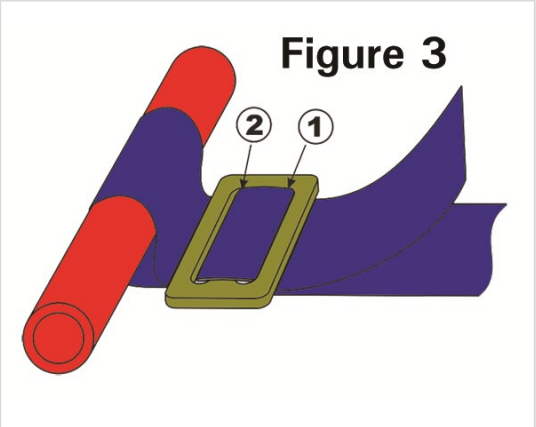

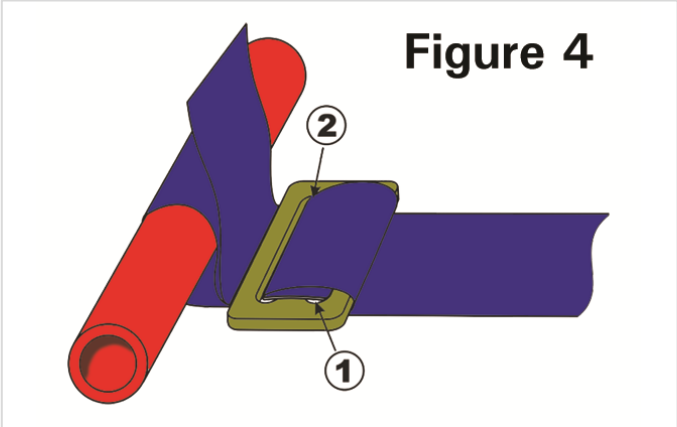

3. Safety Nets

a. Window Safety Net Window safety nets shall be used on the driver's side window of all closed cars unless these are factory (OEM manufacturer) and FIA GT3/GT4 race prepared cars with fixed Lexan front door windows as noted on a Specification Line. All window nets shall meet SFI Specification 27.1., and shall bear an "SFI Spec 27.1. label" to that effect. Alternatively, window nets that meet the requirements of FIA J253.11 may be used. Competitors must be able to provide proof of meeting the FIA standard, either via certification or physical measurement. (Note: window nets need not be dated.)

The window net shall be equipped with a quick release device and when released it shall fall down, thus not having to be flipped up on the roof.

Nets shall be attached to the roll cage; plastic buckles, cable ties, hose clamps, and elastic cords are not permitted. Holes in the roll cage to accommodate either support rod are unacceptable unless bushed and welded completely. Refer to figures 7 and 8, "Proper Window Net Installation," for additional information on

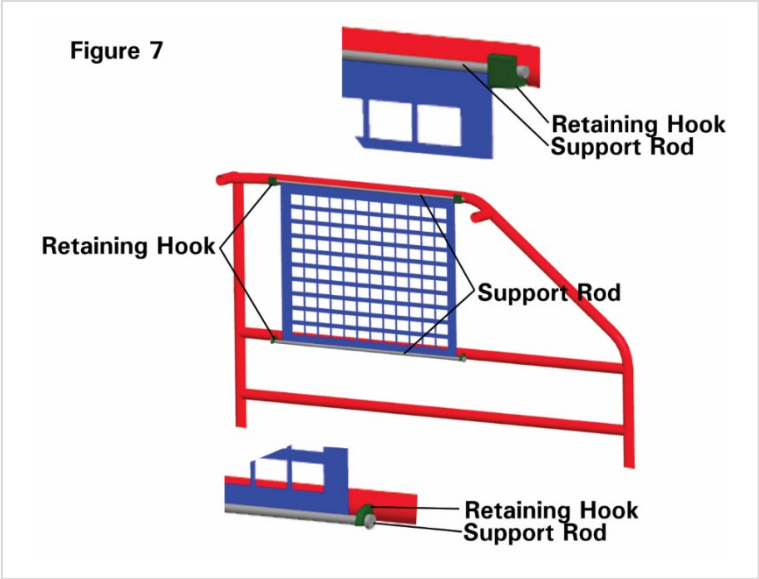

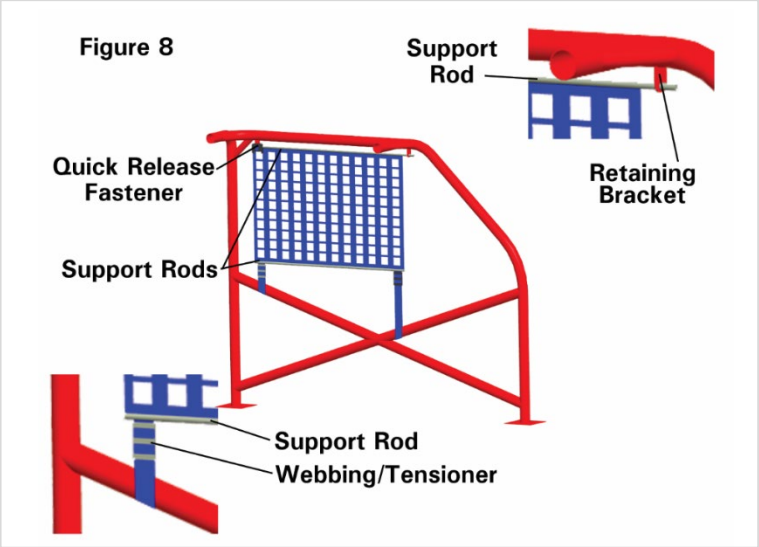

mounting methods. Closed cockpit Sports Racing cars may use arm restraints in lieu of a window net.

b. Inside Net
An inside net running between the main roll hoop and the dash is recommended for all production-based cars and two-seater Sports Racing cars (see figure 6). It is recommended that the lower strand of the net pass the shoulder and run horizontally from the cage to the dash. The upper strand should pass the center of gravity (CG) of the helmet in the side view. The net should run parallel to the center of the car in plain view and be as close to the seat as possible. It is recommended that the net be tensioned tightly and have a way to quickly disconnect it in case the driver needs to exit through the car in an emergency. Metal collars, or some other equivalent method, should be used to keep the strands of the net from moving along the roll cage. If possible, the recommended mounting method is to wrap the net strands around the back of the seat and attach them to the main hoop upright. However, teams should consult the net manufacturer to verify their recommended method of mounting.

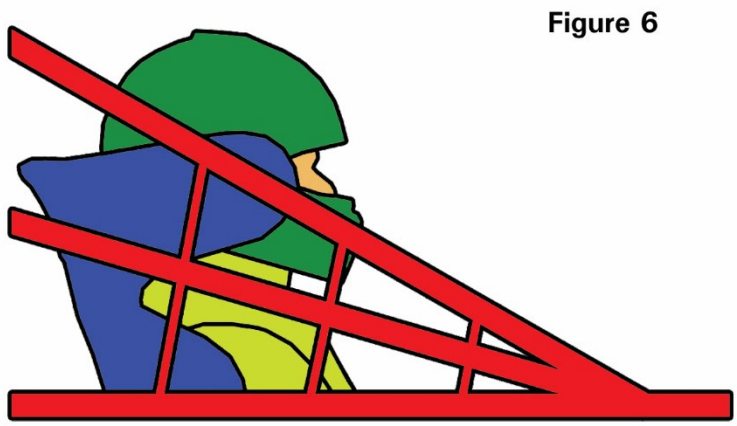

Figure 6

H. Fire System/Suppression
All cars shall be equipped with an on-board fire suppression of some type.

1. The minimum is a hand-held fire extinguisher meeting these requirements:

a. Halon 1301, 1211 or Dupont FE-36, two (2) pound minimum capacity by weight.

b. Dry chemical, two (2) pound minimum with a positive indicator showing charge. Chemical: 10 BC Underwriters Laboratory rating, potassium bicarbonate (Purple K) recommended, 1A10BC Underwriters Laboratory rating multipurpose, ammonium phosphate and barium sulfate or Monnex.

c. AFFF (aqueous film forming foam) or equivalent surfactant foam material, 2.25 liter minimum capacity (by volume). All AFFF fire bottles shall incorporate a functional pressure gauge.

d. The fire extinguisher shall be securely mounted in the cockpit. All mounting brackets shall be metal and of the quick release type.
e. The circle "E" decal of 9.3.22.A.3.b (above) shall not appear on cars which have only a hand-held fire extinguisher

2. It is recommended that all cars employ onboard fire systems that meet the following requirements:

a. Systems certified to SFI specification 17.1 or 17.2, or Those listed by the FIA on Technical List No. 16 The following information must be visible of the unit:
   i) Certification label
   ii) Capacity
   iii) Type of extinguishing agent
   iv) Weight, or volume, of the extinguishing agent
b. Cars shall meet the following regardless of registration date:
   i) The fire system cylinder shall be securely mounted in such a manner that it can be checked during a technical inspection and may be removed for weighing periodically for compliance to full weight shown on the cylinder. (Weight is without valve assembly.)
   ii) Manual or automatic release is allowed. The release mechanism shall be within reach of the driver when belted in the car.
   iii) All on-board fire systems shall be identified with two circle "E" decals–one at the release location and the second on the outside bodywork in line with or as near to the release location as possible.

I. Wheels & Tires

1. Wheels
Any wheel/tire may be used within the following limitations:

a. Wheels must be made of metal.
b. Any wheel stud, bolt, and or nut is permitted.
c. Original equipment wheels supplied by the manufacturer for the year(s), make, model and trim level(s) of the car may be used regardless of any restrictions listed. Note that this allowance does NOT permit the use of tires which are non-compliant for any given class or category.

2. Tires must be 124 ("U") mph rated or better unless otherwise specified or controlled. In National Enduro Classing, a DOT approved tire with a

treadwear rating of 200 is required.

a. Re-grooving of tires by any method once the tire has left the manufacturer is not permitted. Grooving or re-grooving of non-DOT tires is permitted. The only modifications allowed to DOT tires are having treads "shaved" or "trued."
b. Recapping of tires are not allowed in any class.
c. Tire size is unrestricted unless otherwise stated in class specific rules.
d. The use of tire warmers or cooling methods other than natural air convection or conduction is prohibited.

J. Brakes
Shall be pedal operated, working directly on each wheel, and in good working order.

K. Steering & Suspension
Suspension and steering shall be of suitable design and in good working order. Unless OE or otherwise allowed as part of an SCCA Homologated Race Car (E.g., FE or FF), non-metallic suspension control arms, locating links, toe/steering links and pushrods are prohibited.

1. Steering wheels may not be wooden rimmed.
2. It is recommended that steering wheel locks be removed or disabled.
3. A collapsible steering column must be used.

L. Electrical

1. Master Switch
All cars, except those not required to have one by the SCCA GCR and prepared within their SCCA GCR specs must be equipped with a master switch easily accessible by the driver and from outside the car.

a. Installation
The master switch shall be installed directly on either the positive or negative battery cable and must cut all electrical circuits but not an on-board fire system. Solenoid-style master switches are permitted. All terminals of the master switch shall be insulated to prevent shorting out. It shall be clearly marked by the international marking of a spark in a blue triangle and mounted in a standard location.

b. Location
The kill switch is recommended to be installed in front of the windshield on either the cowl or on top of the fender, but close enough to the windshield to be accessible if the car is overturned. Alternatively, it may be mounted below the center of the rear window or on a bracket welded, clamped or bolted to the roll cage or dash, easily accessible through the open window. (Drilling of holes in roll cage to attach the bracket is prohibited.)

c. Marking

Off position shall be clearly indicated at the master switch location.

Kill Switch
Item #2606

Note: Decal can be purchased through

2. Non-Tractive System Batteries
   Battery location is unrestricted within the bodywork. If located in the driver/passenger compartment, vented wet cell batteries must be in a nonconductive marine type container or equivalent. The hot terminal must be insulated on all cars. All batteries (on-board power supplies) must be attached securely to the frame or chassis structure independent of the marine type container.
3. Lithium-Ion Batteries
   Cars using a lithium-ion battery must display the green and black Lithium Battery decal near the kill switch. Cars without a kill switch (Touring and B-Spec) using lithium-ion batteries must display the green and black decal on the top of the driver side door near the window opening. Small lithium-ion batteries that power auxiliary devices within the vehicle (radios, cameras, data acquisition, etc.) do not require the decal to be displayed on the vehicle.

Note: Decal can be purchased through my.scca.com

M. Engine & Drivetrain
The engine, transmission, differential cases, transfer cases, etc. must be securely installed, free of leaks and in sound mechanical condition.

N. Fluids

1. There shall be no visible fluid leaks.
2. Cooling systems shall be equipped with coolant catch tanks to prevent the spillage of coolant onto the racing surface. An oil catch tank with a minimum capacity of one U.S. quart may also serve as the

coolant catch tank, except for cars that are equipped with working OEM pressurized coolant reservoirs, which may use an additional catch tank. If the coolant catch tank is separate from the oil catch tank, the coolant catch tank shall have a minimum capacity of one U.S. pint.

3. Oil holding tanks and engine breathers, whether directly or indirectly ventilating the crankcase, and all transmission/transaxle breathers shall be equipped with oil catch tanks. The oil catch tank may also serve as the coolant catch tank. Minimum catch tank capacity shall be one U.S. quart for the engine, transmission/transaxle, and cooling system. Oil holding tanks and oil filters may be mounted in the driver/passenger compartment.

O. Other

1. Carburetor Fuel Inlet
   On all carburetors with a non-threaded fuel inlet fitting, the fitting shall be replaced by drilling and tapping the carburetor body for a threaded fitting.
2. Scattershields/Chain Guards
   All vehicles where the failure of the clutch or flywheel could create a hazard to the driver (e.g., Tube-frame "GT" cars or cars with non-production are required to have scattershields or explosion-proof bell housings. Chain drive cars shall be fitted with a protective case/shield to retain the chain in case of failure.
   a. Minimum material specifications are:
      i) .125 inch SAE 4130 alloy steel
      ii) .250 inch mild steel plate
      iii) .250 inch aluminum alloy
      iv) NHRA or SFI approved flexible shields.
3. Mobility Decal
   If a driver will need assistance getting out of their car, the Mobility & Impairment decal (Figure 4) shall be displayed on the driver's door.

Note: Decal can be purchased through my.scca.com

P. Fuel/Fuel Systems

1. Fuel Type
   Fossil fuel-powered vehicles must run on readily available unleaded gasoline with a maximum octane of 93. A spec fuel may be declared in the event supplemental regulations.

a. When allowed in exhibition class or supplemental classes, GCR-class cars must run on GCR Legal Fuel.

2. Fuel/Tank Cell Specifications

Fuel tank may remain unmodified and in its stock location or shall be replaced with a fuel safety cell meeting the following requirements:

a. Any safety fuel bladders must be constructed and certified in accordance with the FIA FT-3 or higher (FT-3.5, FT-5, etc.) or SFI 28.3 specifications. Fuel cells do not time out and have no expiration date. All safety fuel cells shall consist of a foam-filled fuel bladder enclosed in a metal container at minimum.

b. There is no restriction of fuel cell capacity or dimensions of the fuel cell, except where otherwise specified.

c. The installation of more than one cell is permitted.

d. Installation

Internal body panels may be modified to accommodate the installation of fuel cells as long as modifications serve no other purpose. If installation includes encroachment into the driver's compartment, a metal bulkhead must prevent exposure of the driver to the fuel cell. The fuel cell must not be installed any closer to the ground than 6 inches, unless enclosed within the bodywork or OEM floor pan.

i) There must be a metal bulkhead between the driver/passenger compartment and the compartment containing the fuel cell. This includes fuel cells that are flush mounted with driver/passenger compartment panels or otherwise exposed to the driver/passenger compartment.

ii) Fuel cells must be located within 12 inches of the standard tank. The 12-inch measurement is taken from the perimeter of the stock and alternative fuel cell. Fuel filler location is unrestricted with installation of a safety fuel cell.

e. Container

i) The bladder shall be installed in a container of .036-inch steel, or .059-inch aluminum that fully surrounds the bladder.

f. Fuel Cap and Vents

i) A positive locking fuel filler cap (no Monza/flip type) shall be used. Fuel pickup openings and lines, breather vents, and fuel filler lines shall be designed and installed so that if the car is partially or totally inverted, fuel shall not escape. Fuel filler necks, caps, or lids shall not protrude beyond the bodywork of the car.

ii) If the fuel filler cap is located directly on the fuel cell, a check valve is not required, provided the filler cap is a positive locking type and does not use an unchecked breather opening. If the filler cap is not located on the fuel cell, a check valve must be installed on the fuel cell to prevent fuel from escaping if the cap and filler neck are torn from the tank.

iii) Fuel cell breathers must vent outside the car and away from the exhaust.

g. Rotary Molded Cell
The use of rotary molded fuel cells not having a bladder, or not contained in a metal can, is allowable in those cars that do not require the use of a fuel cell, but where they are an allowed option.

4. SPORTING REGULATIONS

The following descriptions and procedures govern SCCA Race Experience Events. Participants are expected to follow these rules and the intent of these rules. They may be penalized for not doing so.

Participants are reminded that there are many unwritten best safety practices impractical to commit to the written rulebook. If an official or track employee asks you to do something in the name of rules and you believe it is in error – do not argue with that person. Bring it to the attention of the Race Director or Event Lead for a solution.

4.1 Paddock

The area where a car parks when not participating in its sessions is the Paddock. Event Information/Supplemental Regulations may delineate the Paddock location and assignment of equitable amounts of space to each competitor.

4.1.1 Endurance Experience Paddock

The following applies to working on your car during an Endurance Experience race in the paddock:

A. At tracks where the paddock access to and from pit road creates a scored lap not completed on track, that lap shall be removed.

B. Teams may not refuel their car in the paddock during the race. A 15-lap penalty will apply to teams fueling in the paddock.

C. The intent of these rules is that routine service is done on pit road and with the allowed tools – teams shall not circumvent the intent of those rules. (e.g., going to paddock to change tires using air jacks for the purpose of doing it quicker than a normal pit road stop.)

4.2 Grid & Pre-Race/Session

4.2.1 The Grid

The Grid is the area of the track which the field is aligned prior to the session start.

A. Starting Order
Generally, grid order for practice and qualifying sessions will be on an "as arrived" basis. Any method of determining starting positions for the race must be described in the Event Information/Supplemental Regulations.

B. Late to Grid
Cars that are not in position on the grid prior to the 1-minute signal (or deadline given in the Event Information/Supplementary Regulations) relinquish their starting positions. They will be held behind other cars and must start from the back of the field.

C. Starting Vehicles on Grid
Engines shall be started by the driver sitting in the normal driving position, using an on-board or supplemental power supply. Carburetor or fuel injection systems may be manipulated and/or primed in the starting process. Push starts are permitted only as specifically authorized as specified in 4.2.1.D.

D. Push starts on Grid
A car that cannot start on the grid may be push started under the supervision of the Grid Marshal, provided it is back in position prior to the 1-minute signal. Vehicles that are push started after the 1-minute signal, or not in position at the 1-minute signal relinquish their grid positions. They

will be held behind other cars and must start from the back of the field.

E. Five and One-minute Warnings
Race control instructs the 5-minute and 1-minute warnings to be given to the grid, indicating the time remaining before the start of the pace lap or other start procedure. These signals must be plainly audible and/or visible.

1. Engines should be started at or before the 1-minute signal.
2. At or before the expiration of the 1-minute warning, the cars will be released to begin the pace lap(s) or other start procedure.

F. Late Starters
After the field has left the grid, the Race Director may release cars that were not in position at the 1-minute warning to join the back of the pack either from the grid at the beginning of the pace lap or – if it is too late for that vehicle to safely catch the field – from the pit exit at the tail end of the pack following the green flag or false start.

4.2.2 The Pace Lap
One pace lap precedes all races unless the Race Director or Event Lead authorizes an alternate procedure. The intent of the pace lap or similar procedure is to have a controlled, formed field at the start of a race with no one gaining any more advantage than earned through the qualifying procedure.

A. The pace lap may begin at a brisk pace but must be sufficiently slowed before the start line to allow orderly grouping of the field. The actual speed immediately prior to the start is dictated by the size of the field, and course layout. However, the standard start is a rolling start and not a flying start.

1. If a pace car is used, it will be positioned at the head of the pack, with emergency lights flashing. Drivers may not pass the pace car until it turns off its emergency lights and pulls off the track, and the field will maintain the speed of the pace car before it pulled off track until the green flag.
2. If a pace car is not used, the pole car will pace the field complying with directions from the Race Director or their designee. The pole car will maintain a constant speed from the grouping until the green flag and shall not modify its speed approaching the flag stand.

B. A car may not improve its position in the field after the cars are released from the grid for the pace lap.

1. A car that fails to start with the pace lap or falls out of position during a pace lap relinquishes its grid position and may rejoin only at the back of the field.
2. A car that is disabled and cannot keep the pace should not hold up the field. The driver must signal that their car is disabled by raising an arm, pulling to the side of the course, and staying well off the racing line. Other cars may safely pass the signaling vehicle. The driver of a disabled car should seek assistance at the nearest corner station or pit at the first opportunity.
3. When a car drops out of the pace lap(s), everyone in the column behind that car must close up behind the car in front; moving up under this circumstance is not considered improving position or passing under yellow.

4.2.3 The SCCA Standard Rolling Start

A. The SCCA standard rolling start will be used at all SCCA Race Experience races unless an alternate procedure has been approved by the SCCA National Staff and is included in the event Information/Supplemental Regulations.

B. The Starter shall be safely located and in view of most of the drivers in the field as they approach the starting line. The starter shall remain motionless, with the green flag hidden, and no other flags visible.

C. The Starter will start the race by suddenly and continuously waving the green flag until all cars have passed the start line if the field is:

1. At a constant low speed;
2. Double file/two-by-two; and
3. Well bunched; and
4. Close enough to the Starter that most of the drivers can see the flag.

D. Racing begins and passing may occur throughout the field when the green flag is displayed, or as noted in the event information/supplemental regulations.

E. Aborted Starts

1. If the field is not aligned or drivers have improved their positions, the Starter may abort the start by displaying no flag and shaking their head, "no." Drivers should not accelerate and raise one hand to confirm that the start is aborted.
2. If the race is not started, pace-lap procedures should be repeated. Drivers may safely pass under the Double Yellow Flags to return to their original grid position. However, cars late to grid or that dropped out of position during the pace lap must remain at the back of the pack.
3. Any additional pace lap(s) following aborted start(s) are under double standing yellow flags at all stations and are scored as race laps or under the official race clock. Timing starts when the starter either waves the green or shakes their head in the negative to indicate an aborted start.

4.3 Race and Sessions

4.3.1 Flags

Flags or lights convey the commands or information indicated below. They must be obeyed immediately and without question.

A. Flag Meanings

1. GREEN FLAG (Solid Green)
   When displayed, the green flag indicates that the course is clear, and that racing is under way. The green flag is typically shown only by the Starter.

2. YELLOW FLAG (Solid Yellow)
   A Yellow Flag of any type indicates an incident ahead that creates a dangerous situation. Drivers should slow and proceed at a reduced speed with no passing allowed.

   The no passing zone starts at a perpendicular line across the track from the flag and ends at a perpendicular line across the track from the last component of the incident causing the yellow flag – or as noted in the Event Information/Supplementary Regulations. The last

component may be the car, driver, responding officials, other vehicles and/or large debris.

Drivers are reminded that you may not be able to see if there are more incidents before the next flag station, and particularly at night, discretion should be used to avoid penalties for passing under yellow.

a. STANDING YELLOW
You are approaching an incident where your and other's safety are at risk. The racing surface may be clear but there is immediate danger to you or others if you left the racing surface. Slow significantly and proceed through the incident at a reduced speed.

b. WAVING YELLOW
You are approaching an incident that has great danger to you and others. The racing surface may be partially or completely blocked. Slow significantly and be prepared to stop. All efforts should be made to proceed through a Waving Yellow Flag in single file order.

c. DOUBLE YELLOW, DISPLAYED AT ALL STATIONS
Indicates the entire course is under yellow (full course yellow). All stations will display double yellow flags for all pace and safety car laps. SLOW DOWN, NO PASSING. However, cars may carefully pass emergency vehicles and other cars that are disabled or off pace (see 4.3.1.C.c).

NOTE: A driver may encounter several flags before reaching the emergency area. The requirements are still the same: SLOW DOWN, NO PASSING.

3. BLUE FLAG (Blue with Diagonal Yellow Stripe)
Another competitor is following very closely or is trying to overtake. This flag may be displayed standing or waving, depending upon the speed differential.

4. SURFACE CONDITION (Yellow with Vertical Red Stripes)
Take care. A slippery condition exists, or debris is present on the racing surface. This flag is displayed standing.

5. WHITE FLAG (Solid White)

a. STANDING WHITE
Caution and take care for a slow-moving race car, ambulance or other emergency vehicle on the racing surface. The standing flag is displayed for two (2) flag stations prior to the vehicle in question. In addition, a standing white flag will be displayed during the first lap of each race group's first session of the day unless another flag is already on display to indicate the location of the flagging stations.

b. WAVED
A waving white flag may be displayed by the Starter to indicate the start of the last lap of the race.

6. BLACK FLAG (Solid Black)

a. CLOSED BLACK FLAG (Furled)
Pointed or shaken at an individual car from the Starter's stand

(optionally, accompanied by a number board indicating the car number): WARNING for driving in an unsafe and/or improper manner. Continued unsafe and/or improper driving will result in an OPEN BLACK FLAG.

b. OPEN BLACK
Displayed from the Starter's stand with a number board indicating the car number: Proceed directly to the pits and the location designated by the Race Director or event Information/Supplemental Regulations for consultation with Officials. DO NOT TAKE ANOTHER LAP.

NOTE: This flag and number board may also be displayed at station(s) elsewhere on the course.

c. OPEN BLACK, DISPLAYED AT ALL STATIONS
The session has been stopped; all cars must stop racing, and proceed directly and immediately to the pits, exercising extreme caution. This flag will be displayed with an 'ALL' sign at the Starter's stand and the sign may also be shown at station(s) elsewhere on the course.

NOTE: THE BLACK FLAG CAN ONLY BE DISPLAYED BY ORDER OF THE RACE DIRECTOR OR CHIEF STEWARD AS RELAYED THROUGH RACE CONTROL.

7. MECHANICAL BLACK FLAG (Black with Orange Ball)
Displayed from the Starter's stand with a number board indicating the car number. There is a mechanical problem with the car. Proceed directly to your pit or the location designated by the Race Director or event Information/Supplemental Regulations. DO NOT TAKE ANOTHER LAP.
NOTE: This flag and number board may also be displayed at station(s) elsewhere on the course.

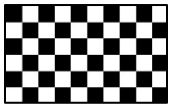

8. CHECKERED FLAG (Black and White Checks)
Displayed at Finish to indicate that the session is finished. Continue cautiously to the pits

9. RED FLAG (Solid Red)
Displayed at each station and on the Starter's stand – EXTREME DANGER – THE SESSION HAS BEEN STOPPED. Come to an immediate, controlled stop at the side of the race track (preferably before and within sight of a staffed station or where specified in the event Supplemental Regulations). When released by an official, proceed cautiously to the pits. Once a red flag has been displayed, it will not be withdrawn until all cars have come to a stop.

a. FIA Red Flag Rules
It is permissible – if noted in the supplementary regulations and announced at any drivers meeting(s) – to use the FIA Red Flag procedure which works much like a black-flag all. If used in this manor, this flag should be waved at the start line when it has been decided to stop a practice session or the race. Simultaneously, each corner station should also display a red flag and:

i) all cars shall immediately reduce speed and proceed slowly back to the pits. Overtaking is forbidden and drivers should remember that race and service vehicles may be on the track, the circuit may be totally blocked because of an accident and weather conditions may have made the circuit undriveable at racing speed.
NOTE: THE RED FLAG CAN ONLY BE DISPLAYED BY ORDER OF THE RACE CONTROL.

B. Lights instead of flags/In-Car Flagging
Event Information/Supplemental Regulations will state where on the course and for what purpose lights, if any, will be used, or if In-car flagging will be used and what is required.

C. Full Course Yellow
The Race Director may use a safety car as necessary to control the field and to assure expeditious safe clean-up of any incident.

a. A safety car and/or the lead car may be used to control the field and to assure expeditious restarts. All vehicles must pass any on track incident(s) well under control. It is permissible to control the field by having all cars maintain gaps and slow to a pre-determined speed
   i) If a safety car is used will enter the course only under double yellow flags.
   ii) When dispatched, the safety car, with emergency lights flashing, will gather the field under steady and reduced speeds that are appropriate to track conditions.
   iii) If the safety car is not dispatched in front of the leader, an official in the safety car may wave cars by until the leader is behind it.
   iv) Prior to a restart, the safety car will maintain the established pace, extinguish the lights, and exit the course.
b. If there is no safety car, and the lead car will be used to control the field, the lead car must:
   i) Slow the field to permit the entire field to bunch up single file behind it.
   ii) Maintain a consistent pace that is appropriate to the track conditions.
   iii) Maintain a steady pace coming down to a restart.
c. Duties of the Field
   i) If the field will be gathered behind a pace or lead car, all drivers must make every effort to safely catch the field as soon as possible to form a single and evenly spaced line behind the safety car or leader.
   ii) There is no passing under a Full Course Yellow Condition Unless:
      a) An official in the pace car waves a driver around.
      b) A driver of a disabled car has raised their arm to signal an issue and pulled well off the racing line.
   iii) Drivers must maintain the safety car's pace and not improve their positions or begin racing until the green flag has been displayed or double-yellow flags have been

lowered to signal clear course conditions, or as noted in the event information/supplemental regulations.

iv) A driver of a disabled car or a car that cannot maintain the pace should not hold up the field. They must signal that their car is disabled by raising an arm, pulling to the side of the course, and staying well off the racing line. Other drivers may safely pass the signaling vehicle. A driver of a disabled car should seek assistance at the nearest corner station, or pit at the first opportunity.

D. Virtual Safety Car
A "Virtual Safety Car" type procedure may be used in place of a full course yellow and critical details must be included in the Event Information/Supplementary Regulations. Full course yellow restrictions concerning pit stops and passing apply during any Virtual Safety Car procedure.

E. Stopping a session/race
When it is necessary to stop a session, the Race Director may do any of the following:

1. Order a black flag with an "ALL" sign at Start (this sign may also be shown at additional stations elsewhere on the course) and a black flag at all other flag stations around the course.
2. Order a red flag at Start and all other flag stations. Further instructions will be conveyed by officials.
3. Practice and qualifying session time may be stopped during Red or Black Flag All scenarios.
4. During Endurance Race Experience Events, the official race time shall **not** be stopped during Red or Black Flag All scenarios.

4.3.2 Maximum Driving time
There is no maximum driving time during any Race Experience Event.

4.3.3 Minimum Number of Drivers

A. During Club Race Experience Events, only one driver may run in a car during the race.

B. During Endurance Race Experience Events, the following chart will determine the minimum number of drivers required on a team during a race:

Race Length	Minimum Number of Drivers
Up to 2 Hours	1 Driver
2 to 6 Hours	2 Drivers
Longer than 6 hours	3 Drivers

4.3.4 On-Track Expectations and Conduct
Drivers are expected to follow all rules for flagging, pit road speed limits, racing etiquette, and any other event-specifics outlined in Event Information/Supplementary Regulations. Failure to do so will likely result in black flags, penalties, mistrust from your competitors, a poor finishing position and not being invited back to drive. Above all else, be the driver you want others to be.

Drivers must follow those general guidelines and the specific examples below.

A. Car Control & Track Limits

1. Drivers should not make repeated/constant driving errors or demonstrate a lack of control (e.g., going off track, erratic lines, excessive sliding).
2. Drivers must always stay on the marked racing surface and may not drive off track without justification. Once off, a driver may reenter the track, but only when it is safe to do so and without gaining a lasting advantage.
3. Drivers should not create a situation where debris is brought onto the track.

B. Racing Room

Each competitor has a right to racing room, which is generally defined as sufficient space on the marked racing surface that under racing conditions, a driver can maintain control of their car in close quarters.

1. When a driver is caught by another driver lapping them, the driver must allow the faster driver past at the first possible opportunity.
2. Drivers are expected to share the track and work together so that all drivers may perform to the best of their ability. Drivers may not hinder another competitor intentionally or thoughtlessly.

C. Overtaking

1. The overtaking driver bears the primary burden of responsibility for the decision to pass another car and to accomplish it safely because that driver has the best visibility. The overtaken driver is responsible to be aware that they are being passed and not to impede or block the overtaking car.
2. Drivers must respect the right of other competitors to racing room. More than one move in response to defend a position is not allowed. Deliberate squeezing of a car beyond the track edge or any other abnormal change of direction is strictly prohibited.

D. Contact, Impacts, Spins and Offs

Drivers are expected to always maintain control of their cars, and the SCCA Race Experience Program is a non-contact sport. This includes spins or a loss of control causing a vehicle to leave the course, and any contact with other vehicles or impacts with barriers or the ground.

1. During All Race Experience Events
   a. Any driver involved in a loss of control or contact of any type must have a consultation with a driver coach before their next on-track session.
   b. It is reasonable to assume that not all contact or loss of control may be observed by officials. Drivers who try to take advantage of this human error by not self-reporting and hoping to get away with it will likely face escalated consequences if/when that contact is discovered.
   c. A driver leaving the track surface to avoid an incident/spinning car or to not impede another driver is not considered a loss of control.
2. During Endurance Experience Events

a. Reporting after a Loss of control/Incident
Any and all drivers involved in a loss of control or contact of any type must report to Officials on Pit Lane as soon as possible.
   i) Drivers who do not self-report to pit lane may be black flagged, and then will need to take extra time explaining what happened and why they didn't self-report.

b. Official Actions for Loss of Control/Incidents:
Officials may take the following actions for incidents or violations of this section when a driver is black flagged:
   i) Accept the reasoning and situation and allow the driver(s) to re-enter the track
   ii) Require the driver to consult with the driver coach for analysis and feedback. (Team may be allowed to replace that driver and continue.)
   iii) If damage is sufficient, require the vehicle to be re-inspected by tech officials.
   iv) In an incident involving multiple cars, whenever possible, all drivers should be heard before any driver is released back on track.
   v) For frequent visitors to the Black Flag station (driver or team), consequences may include removal from the event for a period of time or the remainder of the event as determined by the Race Director.

E. Hand Signals

1. A driver should signal their intention to enter the pits from the course by raising their arm.
2. An overtaken driver should point to the side on which an overtaking driver should pass.
3. The driver of a stalled car should raise both arms to indicate the vehicle is disabled and will not move.
4. A driver should give a thumbs-up to corner workers to let them know they are not in medical distress.

F. Stopping On Course/Accepting Assistance

1. A driver who stops a car on course must make every effort to assure that the location does not pose a danger or obstruction to other competitors.
2. Drivers and crew may not work on a car that is stopped on course.
3. If a vehicle is flat-towed (connected to service vehicle with a strap and being pulled on all four wheels) the driver must be in full gear and fully belted in.

4.3.5 Passengers
No passengers are permitted in a competition car on track during a session or race. No one may ride outside the cockpit area or on the coach work of any automobile at any time, including victory laps.

4.4 Pits and Pit Stops

The pit lane (which connects the track to access roads in the paddock) and the area behind the pit lane used for support equipment and crews is collectively known as the "hot pits" or "pits."

4.4.1 Club Race Experience Pit Stops

Pit stops should not be a regular part of Club Race Experience Events. Races and sessions should be short enough, refueling or tire changes are not a regular feature.

A. Crews assisting a driver with emergency service, tire temperature checks, and minor mid-session tuning should use good sense when it comes to awareness, clothing, and behavior.

4.4.2 Endurance Race Experience Pit Stops

A. Maintenance/repairs
Tire changes and simple maintenance/repairs may be done on pit road and is subject to the following restrictions:

1. There may only be four crewmembers over the wall attending to a single vehicle.
2. No work to the underside of a car may be done on pit road. (E.g., if a crewmember must be under the car to work on it, that work must be done in the paddock, with appropriate use of jack stands.)
3. Teams who take an excessive amount of time for pit-road maintenance may be asked to take the car back to the paddock.
4. The following items may be repaired/changed/replenished on pit road:
   a. Tires
   b. Brake pads and rotors
   c. Fluid top-offs (Oil, water, fuel, etc.)
   d. Windshield cleaning
   e. Minor body repair
   f. Minor setup adjustments
   g. Repairs to lights
5. Authorized Equipment
   The following restrictions apply to tire-changing equipment and procedures on pit road:
   a. Only one jack is allowed over the wall during the pit stop. No air jacks are permitted for use on pit road.
   b. Only battery-powered or hand-operated tools are permitted during a pit stop.
   c. Only five wheels/tires are permitted over the wall at one time, including the four on the vehicle.

B. Fueling
The following restrictions apply to refueling equipment and procedures on pit road:

1. Pit stops which involve refueling shall be a minimum of five minutes.
2. No team is allowed more than twenty-five gallons of fuel in the pits at one time.
3. Fueling shall only be done using commercially available hand-held gravity-fed five-gallon dump cans designed specifically for fueling.
4. Only one fuel jug is allowed on the track side of the pit wall at a time. Other than a single jug, which must be actively grasped by a crew member, no fuel jugs may rest on the pit wall. Any crew member handing/receiving jugs from the paddock side of the pit wall should be in full fueling-appropriate gear as outlined below.

5. While fueling, there must be a crew person to standing by with a fire extinguisher. This person does not count as one of the four people allowed over the wall during a pit stop.
6. Anyone over the wall while the car is being fueled must be in full fire suits and helmets meeting driver safety specs.
    a. Helmets worn during fueling must be full faced with a closed visor during fueling, and must be in good condition (no frays, deterioration, damage, etc.) but may be expired older Snell, SFI or FIA ratings for automobile motorsport use. (E.g., an SA05 which is no longer acceptable for a driver, may be used by refueling crew.)
    b. An expired helmet must be clearly labeled "Fuel" indicating it is only to be used for refueling.
7. Driver changes and driver-change assistance may be done during fueling. (E.g., servicing a cool suit is considered driver service, cleaning the windshield is not.)

4.5 Rain Races

SCCA Race Experience Events are all-weather races; drivers and teams should be prepared for such conditions.

4.5.1 In cases of unsafe weather conditions including but not limited to excessive rain/track flooding, lightning, high winds, etc. Officials may slow the field using a full course yellow type procedure or stop a session or race.

4.6 Post-Event/Session and Impound Procedures

4.6.1 Impound

"Impound" is the space and time which vehicles/drivers may have to report to following a session or a race. When mandated, drivers must report to impound.

A. Impound may be used for coaching, camaraderie, and vehicle compliance.

B. When used, impound should be no more than 30 minutes, unless more time is needed to investigate issues which arise.

C. Unless handled during a race (e.g., Endurance Experience) post-session/race impound is mandatory for anyone involved in incidents involving contact.

D. Specific Impound procedures must be listed in the Event Information/Supplemental Regulations.

E. The following applies to any post-race or post-session Impound:

1. When required, it is the driver's responsibility to bring their car to impound immediately, without going to the paddock.
2. During impound activities, cars are not allowed to be worked on or touched by anyone unless directed by a tech official.
3. The Chief Tech Inspector will report any questions or doubts about a car's compliance or condition to the Race Director or Event Lead.
4. For each impounded car, weight, fuel capacity, and other items appropriate for a designated class or safety requirements may be inspected.

5. RECOMMENDED NATIONAL CLASSING

These recommended National Classes for Race Experience. Events may include these classes, no classes at all, or allow other classes if all vehicles fall within the performance range and Section 3 of this document.

These classes are not mandatory, and competitors are reminded that even if their car doesn't fit a specific National class, events may still have a class for your vehicle.

When used, it's recommended that cars are classed into these four classes plus a fifth "exhibition" class for vehicles on tires with less than 200 Treadwear rating or vehicles not meeting specific parts of these rules initially.

5.1 Purpose

The recommended National Classes are for a general range of abilities. Participants should not expect these classes to have strict adherence to a Balance of Performance (BOP) or to strive for parity within each class.

Creating, adjusting and enforcing such levels of parity inhibits broad access, easy to understand rules, and providing an experience first and competition second.

For those participants who seek robust parity dictated by formulas and class rulesets – the SCCA invites and encourages you to explore our Road Races governed by the GCR.

5.2 General Allowance and Modification Rules

5.2.1 National Classes E1-E4 are for mass produced production automobiles which started life on an assembly line. Exhibition Class is for Tube frame, hand-built, composite, and other special-construction vehicles.

5.2.2 National Race Experience Classing is not a "restricted ruleset." Provided any modification is performed safely and the part or systems in question do not make the vehicle ineligible (Section 3.1) and those modifications meet the rules in section 3.2, anything not specifically disallowed is permitted.

5.2.3 While modifications may not be limited, they may create changes in classing or render a car ineligible for a National Class if it is deemed to be beyond the performance limits of the program.

5.2.4 Any authorized addition, modification, substitution, or removal may not perform a prohibited function.

5.2.5 Participant and Car Builder Note:

We understand a minimal "unrestricted" set of rules allows a wide range of ideas and approaches to participation, motorsports history teaches us revolutionary competitors often push such rules beyond the bounds of good sense and desired performance levels and can create a place where many participants no longer enjoy the activity, which in turn drives down participation.

Whenever a modification approaches that level, to protect participation and the majority of participants, loopholes will need to be closed, or in the case of this set of allowances/classing – penalties and adjustments for those modifications will be assigned.

Participants and car builders should plan their modifications carefully.

5.3 Restrictions & Exhibition Class Modifications

The following modifications are not permitted or bump a vehicle into Exhibition Class:

5.3.1 Active aero devices are not permitted.

5.3.2 Aftermarket underbody aero (tunnels, diffusers, flat bottoms, etc.) move a vehicle to Exhibition Class.

5.3.3 Race Experience National Classes E1-E4 are for DOT-approved 200+ "treadwear rated" tires. Vehicles on DOT tires with less than 200 treadwear or non-DOT racing tires should participate in Exhibition Class.

5.3.4 Electrical Vehicles with added Electrical Power (including hybrids) or modified or changed batteries and drivetrain components of an OE Electrified vehicle should run in exhibition class. Participants are reminded that any electrified vehicle must be built/prepared to the rules meeting the SCCA Supplemental Common Rules for Electrified Vehicles (SCREV).

5.3.5 Vehicles powered by engines not mass-produced for automobiles and sourced from a major automobile manufacturer should run in Exhibition Class.

5.3.6 Gasoline-powered vehicles must run on readily available unleaded "pump gas" with a maximum octane of 93. A Spec Fuel may be declared in the supplemental regulations/event information. Vehicles running fuels allowed in section 3, but beyond 93 octane should run in Exhibition Class.

5.3.7 Minimum Weight

A. The minimum weight of a vehicle is one (1) lb./cc of displacement including drivetrain multipliers and additions.

1. Minimum weight for all classes E1-E4 shall not be less than 2,000lbs. or more than 3,300lbs.

B. Ballast may be added to all cars as required, to meet minimum weight, provided it is securely mounted in the front passenger compartment, rear passenger compartment or trunk, and serves no other purpose.

1. Cars may not carry more than 250lbs of ballast.

C. Official vehicle weights are as raced, without driver.

5.4 National Adjustment Table

Adjustments will be made to the vehicle's displacement for the following items. Adjustments should be calculated in the order listed. (E.g., Actual Displacement times each multiplier, plus any additions.)

5.4.1 Displacement Multipliers

To calculate a vehicle's adjusted displacement, start with the OE displacement of the installed engine and multiply it as stated below. Each line "stacks" (E.g., numerous modifications require several multipliers.)

A. Rotary Engines: 1.25L x number of rotors.

B. OE Forced Induction: x2 multiplier

C. Modified/Aftermarket Forced Induction: x2.5 multiplier

D. Non-OE sequential transmission: x1.25 multiplier

E. Non-OE Gear case (doesn't match chassis or swapped engine), and/or dog-ring engagement: x1.15 multiplier

5.4.2 Displacement Additions

Once you have figured the Adjusted Displacement using the multipliers above, add the following amounts to that number.

A. Any suspension dampers (shocks/struts) with remote reservoirs, more than

one adjustment and/or adjustable spring perches (coilovers): Add 0.25L

B. Relocated suspension pickup points: Add 1.0L

C. Front Splitter extending beyond the bumper as viewed from above: Add 0.25L

D. OE wing featuring adjustability or constructed of separate main element(s), end plates and supports, or Modified OE/Aftermarket Rear Wing: Add 0.25L

5.4.3 Adjustments

A. Underweight cars (less than 2,000 lbs. or less than 1lb/cc) may increase adjusted displacement by 0.2L per 100lbs, with a maximum allowance of 250lbs at +0.5L. Vehicles which are more than 250lbs underweight should run in Exhibition Class.

B. Overweight cars (more than 3,300 lbs. or more than 1lb/cc.) that are not carrying any ballast may decrease adjusted displacement by 0.2L per 100lbs, with a maximum allowance of 250lbs at -0.5L.

5.5 National Classes

Race Experience classing assigns vehicles to a specific class. Classes E1-E4 will each have limits on (Adjusted) engine displacement in liters or Kilowatts (KW), vehicle weight, tire-width and tire treadwear rating. Vehicles beyond the criteria, but still eligible for Race Experience should run in Exhibition Class.

5.5.1 National Classing Chart

Classing Criteria	EX	E1	E2	E3	E4
Adjusted Displacement Maximum (liters)	Section 3 (Eligibility)	6.2L	4.5L	2.9L	1.9L
Adjusted KW (Electric/Hybrid Vehicles	Section 3 (Eligibility)	TBD	TBD	TBD	TBD
Tire Width Limit (MM)	Section 3 (Eligibility)	295	255	245	225

5.5.1 Vehicles meeting all limits for any classes E2-E4 other than tire width, should be placed in the class appropriate for the tire width. (E.g., an E4 car on 245-width ties should run in E3, not EX.)

5.5.2 It is suggested that if there is an existing class ruleset outside of Race Experience (e.g., Spec Miata, Club Spec Mustang, etc.) that when five or more of those vehicles are participating, they should be given their own class.

6. AWARDS

Drivers and teams compete primarily for trophies at Race Experience events, although financial awards including financial value awards (e.g., contingencies) may also be offered.

It is recommended that awards be given to the top three finishers in class, and that to be eligible for an award, a driver or team must complete at least half the distance of the overall race winner. Individual events may institute further criteria as necessary and should note any extended requirements in the Event Information/Supplementary Regulations.

6.1 Distributing Awards

6.1.1 Awards should be available as Official Results are determined, or after the period for receiving protests has elapsed so placing drivers or teams can take their trophies with them. Awards will not be distributed until after any protest affecting their distribution has been settled.

6.1.2 Contingency prizes shall be awarded according to contingency program requirements.

6.1.3 The SCCA may require as a condition of an event sanction that any prize money be deposited in escrow a satisfactory period of time prior to the start of the event, and also that the SCCA controls the distribution of the prize money.

7. PROTESTS, APPEALS and PENALTIES

Entrants, drivers, crew may protest a decision, act or omission of another entrant, driver or crew whose actions the protestor believes to be in error which violate the Race Experience Rules or the Event Information/Supplemental Regulations.

Officials may protest the act, decision or omission of an entrant, driver, crew or official whose actions the protestor believes to be in error, or which violate the Race Experience Rules, the Event Information/Supplemental Regulations or any condition involving the SCCA's sanction of the event, except where exemption from protest is specified elsewhere in the Race Experience Rules or Event Information/Supplemental Regulations.

Protests must be properly filed, reasonable, logical, and based on sound evidence. Reasonable people may differ and a properly presented Protest may not be upheld. Protest fee may be forfeited if the Protest is not well-founded. A protestor whose actions are in bad faith or vexatious may be penalized by the Compliance Committee.

7.1 Filing A Protest

The following are requirements to protest. A protest must:

7.1.1 be in writing;

7.1.2 must specify the sections of the Race Experience Rules or Supplemental Regulations that are alleged to have been violated;

7.1.3 be signed by the protestor;

7.1.4 be accompanied by a fee of $50, These fees may be returned to the protestor at the discretion of the Compliance Committee.

7.1.5 be delivered, with fee, to the Race Director, or to an Assistant delegated to receive protests, who will promptly convey it to the Event Lead and Race Director;

7.1.6 be filed within the time limits specified below, although the Race Director may extend the time in cases where the protestor can show that evidence relating to the protest was not available within the time limit, or where the protestor can show that they were unable to meet the deadline because of circumstances beyond the protestor's control.

PROTEST TYPE	TIME LIMIT
Rules compliance of an entrant, driver, or car.	Within two hours of becoming aware of the potential non-compliance, incident, or potential infraction or 30 minutes after the end of the session, whichever comes first.
Behavior of Driver or Crew	
Protest by Event Lead, Race Director, Chief of Tech or Chief Driving Coach.	Before final results are posted.

7.2 Hearing A Protest

For any protest, the Compliance Committee shall be convened, and the protest heard as practical. The parties concerned will be notified when and where the hearing will occur. This may include third parties who were not immediately identified as being involved in the incident(s) or issue(s) in question. Although all parties have the right to call witnesses, they must state their cases in person. Each party or witness must be heard separately and privately.

Unless they are specifically released by the Event Lead, all parties must remain at the event until a ruling has been issued. If any party is absent, a judgment may still be rendered, and may by default rule against them.

If the Compliance Committee is unable to rule immediately after the hearing, all parties will be notified when and how the decision will be conveyed.

All parties shall be bound by the decision, subject only to appeal, as specified.

For the purpose of this section, the term "party" means anyone who has protested or been protested, and in addition to anyone found to have been involved with and possibly responsible for the incident(s) in question.

7.3 Deciding a Protest

A protest shall be heard by a Compliance Committee made up of:

A. The Event Lead(s)

B. The Race Director(s)

C. The highest-ranking official(s) whose area of responsibility covers the item or action of concern. (E.g., Chief of Tech for a technical violation, Chief Driver Coach for on-track behavior, etc.)

7.4 Penalties

7.4.1 Any team, entrant, driver, crew member, organizer, official, or event attendee may be penalized.

7.4.2 Range of Penalties

The following are the series of actions which may be taken. Penalties may be combined or skipped depending on the severity of the violation.

A. Coaching (will often involve a black-flag or self-report to Driver Coach and may include a mandatory driver change in an Endurance Experience).

B. Penalty including (but not limited to): Loss of time spent on track, time added to a lap time or finishing time, lap(s) or finishing position.

C. Reclassification.

D. Disqualification.

E. Recommendation to the National Road Race Staff for a monetary fine.

F. Recommendation to the National Road Race Staff for exclusion from program for up to one year.

G. Recommendation to the SCCA BOD for further action.

7.4.3 Penalty Schedule

A. Club Race Experience

The following is a general guideline for violations and penalties. While this is the baseline for these situations, penalties may be reduced or increased depending on circumstances. E.g., a good faith effort to get a car to a safe position (pulling far off track, or behind a station) but still cause a black flag

may have the penalty waived or reduced by the Race Director.

Issue	Practice	Qualifying	Race
Causing A Yellow Flag (E.g., spin/stopped on course)	Stop-and-go/consultation with driver coach.	Loss of fastest lap	None
Causing a Black Flag All/Stopped Session	Loss of amount of time session stopped before going back on track.	Loss of all qualifying times.	TBA

1. Session time penalties must be served on pit road.
2. Drivers with no time is left to serve a penalty, or do not serve the penalty by presenting on pit road will start at the rear of the field.
3. Drivers who lose their qualifying times must start behind the last vehicle in their class or at the back of the field, whichever is lower than their qualifying time would have placed them.

B. Endurance Experience

The following is a general guideline for mid-race violations and penalties. While this is the baseline for these situations, penalties may be reduced or increased depending on circumstances.

Any incident will be reported in an official incident log – that log should be posted online and viewable by drivers/entrants.

	OFFENSE		
Incident	**1st**	**2nd**	**3rd**
4-Off/Spin (Same driver)	Furled Black Flag or Black Flag/Pit Road Coach Discussion (Depending on Severity).	Black Flag – Driver may be sent to Chief Driver Coach.	Black Flag – Driver may be removed from race.
Metal-to-metal (Both cars continue)	Furled Black Flag or Black Flag/Pit Road Coach Discussion (Depending on Severity).	Black Flag – Driver may be sent to Chief Driver Coach.	Black Flag – Driver recommended to be removed from race.
Metal-to-metal (Either car goes off)	Black Flag. Driver(s) may be sent to Chief Driver Coach.	Black Flag – If it is the same driver, that driver may be removed from race.	Black Flag – Team may be removed from race on 3rd offense
Impact	Black Flag - Reinspect/Driver Sent to Chief Driver Coach.	Reinspect – If it is the same driver, that driver may be removed from race.	Team (Any driver) – Team may be removed from race on 3rd offense
Major Error in Fueling/Service Procedure	5-Minute Penalty Stop	15-Minute Penalty Stop	45-minute Penalty Stop
Too many people over the wall	5-Minute Penalty Stop	10-Minute Penalty Stop	20-Minute Penalty Stop

C. A major error in fueling/service is something that can't be corrected with a quick reminder – (i.e., visor up and being told to put it down and then doing it isn't a major error.) The discretion should be the amount of effort and time to correct the issue. Major issues would be fuelers not wearing gear, spills, others working on the car while fueling. The exception here is if a person is working "under" a car - no matter how quickly it's corrected, if a crew member is working "under" a car - defined by laying on pit road or needing to have more than your feet/knees touching the ground while the service is done is a major error.

D. If a team has enough drivers removed due to individual penalties, they may not be able to continue without adding additional drivers.

7.4.4 Appeals

Participants may file an appeal when new evidence is found, or it is believed there may have been misapplication of rules. The following applies to National Event Appeals.

A. Event results shall not be appealed.

B. Event decisions concerning behavioral, technical, or procedural compliance may be appealed for future clarification by sending an email to reb@scca.com with the facts of the case within 14 days of the event.

C. The REB is not required to review or hear any technical appeal.

D. If the Compliance Committee feels that a participant should be excluded from future events or receive a monetary fine, that decision shall be elevated to the REB for the final decision.

E. Appeals should be heard within 45 Days of the Appeal or recommendation of fine/exclusion being received and participants will be notified of the decision within seven days of that decision.

7.4.5 Non-protestable/appealable decisions

Rule and procedure violations easily identified by officials are not subject to the protest and appeals process. I.e., mandatory black flags for spins, offs or incidents; penalties for pit-road fueling, service or crew violations; and judgement black-flags/penalties concerning on-track conduct.

A. The pit road driver coach may recommend to the Race Director to skip beyond the “Coaching” level of penalty and ask a team to change drivers/send the driver to the Chief Driving Coach during an Endurance Experience.

B. Only the Race Director may make the decision to remove a driver or team from the car, race or to apply time-based penalties. I.e., a 5-minute penalty for a pit-road violation.

1. For violations which incur mandatory time or lap-based penalties, the observing official should notify the Race Director, and the Race Director shall relay the penalty. (E.g., a 5-minute penalty for fueling violation.)

C. Anyone violating the SCCA Welcoming Environment Statement need not be formally protested for action to be taken by the Event Lead – this decision is not appealable.

APPENDIX A
OFFICIALS AND THEIR DUTIES

1. Event Officials & Duties

In order to hold a satisfactory event, these procedures for staffing and equipment are required.

1.1 SCCA Race Experience Principal Officials

The principal officials must be current annual SCCA members, and if indicated, may require a specific license. These officials may hold more than one position and may have assistants to whom any of their duties may be delegated and may perform more than one duty. The Principal Officials include the following.

- **A.** Event Lead
- **B.** Race Director
- **C.** Driver Coach
- **D.** Technical Inspector
- **E.** Safety Steward
- **F.** Ambassador/Registrar
- **G.** Timing and Scoring
- **H.** Pit Road Officials

1.2 License Grades

As we build the Race Experience Program, we may introduce specific licenses. Until we reach that point, the qualification for each position will be listed in the position description.

1.3 Chief/Assistants

There may be assistants and "co" positions working with the Principal Officials. Whenever there is an assistant, there should be a named "chief" of the position to maintain hierarchy of responsibility.

1.4 Event Official Duties

1.4.1 Event Lead

The Event Lead organizes and oversees the event, making sure all positions are filled and duties are performed as assigned, the event facility is prepared, and all requirements between the SCCA and the host department or Region are met. Whenever possible, the Event Lead should be the "face" of the event by leading meetings.

- **A.** The Event Lead shall have an SCCA Road Racing Event Chair Experience, an SCCA Time Trials/Track Event Lead License or be approved by the National Office.

1.4.2 Race Director

The Race Director is responsible for the general conduct of the event in accordance with the Race Experience Rules and the Event Information/Supplementary Regulations.

- **A.** The Race Director should have substantial wheel-to-wheel racing

experience and an SCCA National Steward's license or be approved by the National Office.

1.4.3 Driver Coach

The Chief Driver Coach is responsible for guidance and coaching of drivers in the event.

A. Driver Coaches must have substantial wheel-to-wheel experience, and an active competition license or active participation in racing is strongly encouraged.

B. It is imperative that Driver Coaches be able to calmly, clearly, and sympathetically be able to offer instruction, correction and when necessary – discipline. A good "trackside manner" is crucial for a safe and desirable event.

C. Driver Coach duties include:

1. Observe and work with the Event Lead, Race Director to ensure on-track driving within Race Experience Rules.
2. Speak to drivers who have been black-flagged or need to come in for on-track issues.
3. The Chief Driver Coach should lead any classroom sessions, session debriefs, and be available for drivers requesting coaching between driving stints or sessions.

D. Assistant Coaches

Assistant Driver coaches are encouraged to handle multiple coaching opportunities simultaneously, or to have a chain of escalation for drivers being black-flagged vs. drivers who might need to end a stint early, or drivers requiring/requesting out-of-car coaching sessions.

1.4.4 Technical and Safety Inspector

Technical and Safety Inspection is to certify that competition vehicles and required driver gear comply with the current Race Experience Rules and event Supplementary Regulations.

A. The Chief of Tech shall have an SCCA Road Racing Divisional, National or Senior Tech License.

B. Technical Inspection Duties Include:

Certifying that the cars comply with the current Race Experience Rules and any event Supplementary Regulations.

1. Issuing tech stickers and helmet stickers to cars and driver gear that comply with all safety regulations.
2. Conducting inspections or compliance checks of cars at the request of the Safety Steward or Race Director.
3. Reporting to the Race Director any cars that do not conform with the requirements of the Race Experience Rules.

C. Vehicle Inspection

1. Initial Inspection/Annual Inspection

   For any vehicle without an SCCA Logbook, without a current annual Tech Inspection, or for issuing an SCCA Annual Inspection; the vehicle must be inspected by a tech inspector holding either an SCCA Divisional, National or Senior Tech license.

2. Logbook Review

For vehicles with a logbook and current SCCA Annual Tech stamp, reviewing, signing the logbook page and issuing the Tech sticker may be performed by a worker holding a current Regional Tech license or above.

1.4.5 Safety Steward

A. The Chief Safety Steward should have an SCCA Road Racing or Track Events/Time Trials Safety Steward License.

B. The Safety Steward or Safety Stewards are responsible for the following duties:

1. To investigate accidents and forward the originals of all reports, including original releases, to the Risk Management Department of SCCA.
2. To notify Risk Management Department, the same day via telephone, of any accident which involves serious injury to a participant or any injury to a spectator.
3. To mail copies of the material sent to the Risk Management Department to the Divisional Safety Steward Administrator.
4. During the event, report to the Event Lead any hazards which require further investigation or action.
5. Before allowing the commencement of the event, verify that an emergency plan is in place.
6. Meet with the Medical Crew to confirm duties, duty stations, equipment, race circuit characteristics, vehicles, and other protocol.
7. To perform safety related duties as delegated by the Event Lead.
8. Ensure the presence of appropriate Emergency Services personnel and equipment at all times while the event is underway.
9. Use every reasonable means to limit access to restricted areas to those who have proper credentials. The use of a credential system (armbands or the like) is recommended at any event where multiple points of entry are possible.
10. Personally examine the insurance and sanction paperwork prior to the start of the event.
11. Conduct a meeting of course workers, crowd control personnel and Deputy Safety Stewards prior to the actual start of the event.
12. Make a final course check-up just prior to the beginning of competition or prior to the resumption of competition after a delay of an extended period. This check is to assess the placement of all personnel, safety equipment, barriers and protective placements (hay bales and the like), and to confirm the readiness of Emergency Services personnel and equipment.

C. Non-Compliance with Safety Regulations

In the event of non-compliance with safety regulations, the Safety Steward shall take the following steps:

1. Advise the Event Lead of the infraction and request the situation be remedied before the next car runs or session begins.
2. If step one fails to resolve the situation, inform the Event Lead that the event is shut down until the problem is corrected.

   NOTE: While the event Safety Steward does have the right to cancel an event for safety reasons, this should be used as a last resort ONLY.

Every attempt should be made to resolve the situation and continue the event in a timely manner. Safety Stewards should work diligently in cooperation with Event Leads and other Officials to ensure an event that is safe for all participants, workers, and spectators. Safety is not an area where compromises can be made, and it is up to all officials to work together to continue the long-standing record of safe events that has become the tradition of SCCA.

1.4.6 Registrar/Ambassador
Registrars/Ambassadors are responsible for accepting, certifying and processing all entries and credentials of officials, and setting up a welcoming environment for participant check-in or at-event registration, including placing all required signs and placards in the registration area.

1.4.7 Timing & Scoring
The Timing Chief is responsible for accurately timing and scoring the event, compiling, and publishing the Official Results, and providing the Official Results to event officials.

1.4.8 Pit Road Officials
When used during an Endurance Experience, Pit Road Officials are responsible for observing and helping maintain a safe Pit Road during the event and that procedures follow Race Experience Rules and any event Supplementary Regulations.

It should be noted that in an endurance race, Pit Road often resembles its own competition, separate from the on-track event, and has its own rules, procedures, and potential penalties. Getting Pit Road as right as possible is imperative to a successful event for all participants.

A. Pit Road Officials **should not**:

1. Assist in pit stops.
2. Direct vehicles out of their pit stall – this is a responsibility of the team.
3. Touch vehicles in competition.

B. It is recommended that Officials working other duties which have limited or no responsibilities during an endurance race (i.e., Tech or Grid) be assigned as Pit Officials to reduce the total number of Event Staff needed.

1.5 SCCA Race Experience Secondary Officials

"Secondary" Officials at a Race Experience event are officials who may be track staff or contractors. These are not required to be SCCA members or have SCCA licenses and may have their own set of local procedures and guidelines separate from the SCCA Race Experience Rules.

If there are track/contractor-mandated procedures that will affect the team or driver responsibilities, those procedures must be noted in the Event Information/Supplemental Regulations.

If an Event uses SCCA-sourced licensed/volunteer workers as these Secondary Officials (E.g., Corner Workers) the Chief of that specialty should be treated as a Principal Official. (E.g., Worker Chief.)

1.5.1 Race Control/Operating Steward
The Operating Steward or person in charge of Race Control controls all on-track sessions and any other activities where circuit safety and functionality may be involved or impaired. These duties are performed in accordance with the

Race Experience Rules, track policies, supplemental regulations and schedule for the event.

A. The person in charge of race control should keeping a log of all communications on the race network or designate a person to keep that log.

1.5.2 Worker Chief

A Worker Chief is the person responsible for recruiting, training, and assigning qualified persons to corner stations. This may be an SCCA official and SCCA volunteers, or it may be included in the track-provided staff.

1.5.3 Corner Marshals/Flagging and Communications

The purpose of Flagging and Communications is to provide course control by:

A. Informing the drivers, through flags, lights, or other signals, of the conditions of the course, the condition of their cars, or of any unusual conditions affecting the running of the event.

B. Establishing and operating a communications system which includes all corner stations and race control, where all communications affecting the control of the event are conducted. Race control maintains direct communications with the Race Director or Chief Steward. Racing must be suspended if communications between race control and the corner stations or between race control and the Race Director is interrupted.

C. Informing the Race Director or Chief Steward and other officials, through the communication network, of the condition of the course and the competing cars, and of any situation requiring decisions and/or action by the officials.

D. Relaying information and instructions from the Race Director or Chief Steward to the emergency vehicles and equipment around the course as well as to the race drivers and corner workers.

1.5.4 Sound Measurement

The "Chief of Sound" is responsible for monitoring racing vehicles at events where sound control limits are required by the facility being used. Sound readings may be taken in accordance with the SCCA Sound Control Manual or Track policies. This may be an SCCA Sound-control worker, or track staff using track-specified procedures.

1.6 SCCA Race Experience Emergency Services/Incident Response Officials

The Safety Steward, in conjunction with the Event Lead are responsible for assuring the event is properly staffed and equipped for medical and fire safety and that shall include equipment and personnel needed to affect a workable medical, fire, and safety plan which meets local, state or federal protocols and regulations.

If a Region sources and staffs its Emergency Services Personnel, it should follow the SCCA Road Racing GCR for staffing and procedures.

1.6.1 Personnel

A. Medical

1. There will be a Medical Official who is either:

a. Physician, MD or DO, preferably with an EMS background and licensed to practice in at least one (1) state or,

b. Paramedic or equivalent (advanced life support technician) with an active license or certification for the state in which they are operating, or,

c. PA (Physician's Assistant) or APN (Advanced Practice Nurse) trained and experienced in EMS and emergency medicine with an active license. The Chief Medical Official may be a person contracted with the track, and not an SCCA member, but the official must coordinate with the Chief of ES.

2. There should be a second licensed medical person (EMT, paramedic, physician's assistant, registered nurse, etc.) to assist the Chief Medical Official(s).

3. Medical units should be stationed so that the maximum time for a first medical response is no more than two (2) minutes.

B. Fire Fighters
At least two (2) persons who are trained to use the equipment should be assigned to each fire truck. A minimum of two (2) persons should be assigned to each fire truck.

C. Wrecker Operator(s)
At least one (1) person who is trained to use vehicle recovery equipment (e.g., a "wrecker") should be used to operate a vehicle of that type.

1.7 Other Personnel

This space is reserved if at any point the Race Experience Rules need to address other positions which do not fall into Operational Roles.

2. Equipment

2.1 Ambulance

During any competition, there shall be at least one (1) ambulance at the track which meets all Advanced Life Support requirements for the jurisdiction in which the event takes place (where "jurisdiction" means the governing body, such as a township, city, or county).

2.1.1 A Basic Life Support ambulance is acceptable only if the track medical facility is equipped and staffed for Advanced Life Support.

2.1.2 Arrangements for transportation from the track by EMS service should be in the medical operations protocol.

2.2 Fire Truck

At least one (1) fire truck shall be equipped to fight automobile fires. This vehicle should be stationed so that maximum response time is two (2) minutes at a speed not to exceed 50 mph.

2.3 Wrecker

At least one (1) appropriate recovery vehicle (e.g., a "wrecker") for disabled cars should be available for course clearing operations. The wrecker may also serve as a fire truck if it is properly equipped and staffed.

2.4 Telephone

A telephone or radio in the tower or medical duty station must be able to contact community emergency services and hospitals.

APPENDIX B
EVENT HOSTING CRITERIA

1. Pre-Event Procedures

1.1 Sanction

All events sanctioned by the SCCA shall be insured for Event Liability and Participant Accident coverage, and once the following items are chosen or produced and then submitted to the National Office, the sanction will be processed, the sanction number will be issued, and an event insurance certificate will be automatically requested and sent to the sanction requestor.

If a Race Experience event is sanctioned as part of a traditional SCCA Road Race weekend, all documents may be sent to the Executive Steward per standard procedures. However, sanction approval of a Race Experience is dependent on National Office approval.

Event sanction requests are submitted online via the Member Account Portal (MAP) at my.scca.com. The online sanction request for a Race Experience must include the following before sanction number will be issued and event insurance certificate requested:

1.1.1 Title/Description
Events Must have a Title/Description/Type. (E.g., Eastwestern Region 8-hour SCCA Endurance Race.)

1.1.2 Location/Facility
Events must be run at tracks and/or configurations which are up to date on inspection and review for Road Racing.

1.1.3 Event Information/Supplementary Regulations
The Event Information – frequently called "Supplemental Regulations" may be submitted as a pdf document in the "Event Documents" section or as a valid link in the "Notes for Sanction Department". Supplemental Regulations should include key information that participants need to know, including but not limited to:

A. The sanction number, name, location, dates, type, and description of the event.

B. An announcement conspicuously placed: "Held under the current SCCA Race Experience Rules."

C. The name and contact information of the organizers as well as the name of the highest-ranking Event Official (E.g., Race Director or Event Lead.)

D. The method by which to enter the event and name/contact for Chief Registrar/Ambassador.

E. Event-Specific Rules/Procedures that are in addition to the Race Experience Rules. (E.g., competition classes, track-specific flag-procedures, event-specific procedures, etc.)

F. Track Rules that are more limiting than the Race Experience Rules. (E.g., Track policies for pets, sound limits, waste products, camping, shipping,

etc.)

G. All other information necessary for the proper conduct of the event.

1.1.4 Event Schedule

A copy of the Event Schedule must be included in the Supplemental Regulations/Event Information or included in the online sanction request as a separate document may be submitted as a pdf document in the "Event Documents" section or as a valid link in the "Notes for Sanction Department". Event Schedule must include:

A. Gate opening and closing hours.

B. Hours of operation for Registration/Check-in and Tech Inspection.

C. Schedule and description of planned groups.

D. Times and locations of activities and mandatory meetings.

1.1.5 Officials

The Key Officials listed in Appendix A ,1.1.A – 1.1.H Required Officials should be filled and able to be listed.

1.1.6 Entry Form

The following information should be collected during SCCA Race Experience entry:

A. Full name, address, membership number, region of record, sponsorship information and any licenses held for driver(s).

B. Numbers of entrant(s) and driver(s).

C. Space for full description of car to be entered.

D. Spaces for signature(s) of entrant(s) and driver(s) for waiving liability and/or indemnity declarations.

E. A line acknowledging the authority of the SCCA Welcoming Statement and the Race Experience Rules, declaring that the entered car complies with the provisions of those, and entrant, drivers and crew will abide by both.

F. Person(s) to be notified in case of accident.

G. Any other information required for the clarification of all other details of the event.

1.1.7 Changes

No changes should be made to the Event Information/Supplemental Regulations, except for the schedule, event officials and/or class groupings after the beginning of the period for receiving entries unless for safety reasons or forces beyond the control of organizers. All schedule changes should be approved by the highest-ranking official at the event.

1.1.8 Separate Documents

If the collection of Event Information/Supplementary Regulations, including the Schedule and Entry form are divided into different documents printed on paper or as individual digital PDFs (as opposed to a single event page with the schedule leading to an Online Entry form) the sanction number, organizing SCCA department or region, event name, location date of the event and the phrase "this event is held under the SCCA Race Experience Rules" must be included on each document. It is strongly recommended that Regions use the Sanction Template provided by the National Office as the format for their Supplemental Regulations.

1.1.9 Events formerly run as "GCR" Events

Organizers (Regions) switching the sanction type of an SCCA GCR-based Endurance race to a Race Experience type may submit the existing series or event-specific supplemental sporting regulations already in place for approval. Any alternate sporting regulations must be noted in the event notes inside of the Sanction Request Portal and approved by the National Office. If it is necessary to accommodate local demand and interest, alternate sporting regulations may be accepted in part, in whole, or with stipulations.

1.2 Event "Page" *(strongly recommended but not required)*

The event needs a page to house this information. Often this can be done inside of your registration host. This page takes the place of the information that might have been mailed together when entries were primarily done through physical mail.

It is critically important that when the Sanction Process starts through "calendaring" an event – potential entrants need a page to go to which explains to them when and how they can register.

When a potential entrant can find an event on scca.com, but not any further information on that event, or has to navigate their way through a region web page before finding more details on that event, it often creates frustration, and the choice not to enter the event.

2. At-Event Procedures

The following procedures are required at an Event:

2.1 Waivers

All participants must either sign an SCCA Event Waiver or have a current, SCCA Annual Waiver on file.

2.1.1 Credentials

All participants must be properly credentialed for the event. There must be specific credentials that identify permitted access to allowed persons (E.g., hot passes for pits and grid). Adults in hot areas must have an SCCA Annual or Weekend membership.

A. Credentials for Minors

If the minor, between the ages of 14 and the age of majority as determined by the law in the state of the individual's residence (typically 18 years old, varies by state), requires hazardous area credentials they must be an Annual SCCA member and have an executed annual minor waiver on file at the National Office and present a hard card at registration.

2.1.2 Inspections

A. Vehicles with SCCA Logbooks:

Vehicles with SCCA logbooks may be inspected according to GCR procedures, including the allowance of annual tech inspections.

1. Logbooks may be issued to Race Experience vehicles.

B. Vehicles without logbooks:

For vehicles without an SCCA-issued logbooks, an inspection shall be performed to assure the vehicle meets required safety rules before the event tech sticker is issued.

2.1.3 Meetings/Classrooms

A. All Drivers

The Event Lead should hold a driver's meeting on the first day of the event. Attendance of all drivers is required. Each meeting should cover at least the following:

1. Welcome the drivers/teams to the event.
2. General expectations of participants and the event.
3. Any track-specific procedures that are unique to the event.
4. Any event-specific procedures that are unique to the event.
5. Reminder that while participants are competing against each other, that everyone is on the "same team" when it comes to leaving the event happy with the racing that teams, drivers and officials can be proud of.

B. Novice Drivers

For drivers without wheel-to-wheel experience, or in their first few days of wheel-to-wheel racing, and in-depth "Novice Meeting" should be given to those drivers on the first day of the event, and a longer review discussion session on any subsequent days should take place before on-track sessions. Each meeting should cover:

1. Each of the points of the primary driver's meeting, but more in depth.
2. An in-depth discussion of each flag and what to do.
3. Grid procedures (E.g., 5-minute and 1-minute warnings, hand signals,

when crew must clear the car, etc.) .

4. What to do in an incident (E.g., signaling to corner workers, re-entering the track after a spin, what to do if you have a mechanical problem).
5. Race craft and traffic management strategies.
6. Debrief meetings following on-track sessions may be used.

2.1.4 Emergency Response
The dispatching of emergency vehicles on the track should be authorized by the Operating Steward/Control Worker (or according to track policy). Dispatching procedures should be agreed on in advance by the Race Director, Safety Steward and emergency response personnel. All emergency vehicles shall be equipped and staffed at all times while entrant cars are on course.

2.1.5 Flag Stations
Flag stations and observation points should be placed as to provide complete, continuous coverage of all parts of the course. They must be manned by at least one person. All stations must be provided with a method of communication to Race Control at all times.

2.1.6 Pit Road/Driver Coach
The Driver Coach or an Assistant Driver Coach must be available to communicate with drivers in the pits.

2.1.7 Sound Control
If sound control limits are required by the facility, sound may be monitored according to track policies or the SCCA guidelines.

2.2 Race Experience as Driver's School Credit

If a driver has demonstrated proper knowledge of and reaction to flags, awareness in wheel-to-wheel racing situations including race starts during an SCCA Race Experience event; the "drivers school approval" page may be signed off and that completed SCCA Driver Participation Log may be used as Driver's School Credit in the Novice Permit.

2.2.1 The Driver Participation Log may be used to track experience at SCCA and non-SCCA Track Events, Time Trials, HillClimbs or non-SCCA wheel-to-wheel events; however, the Drivers School Page may only be completed after observation at an SCCA Race Experience Event.

2.2.2 The Drivers School page in the participation log must be signed by the Chief Driver Coach and the Race Director of the Race Experience Event.

3. Post-Event Procedures

The following procedures are required following an Event:

3.1 Event Results

Online or printed Official Event Results shall be available to each entrant within seven days of the event, seven days of the notification of any protest decision affecting Results, or seven days of a Court of Appeals decision, whichever is applicable, and whichever comes first. Results must be distributed in at least one of the following ways:

A. At the event.

B. Mailed at the organizer's expense.

C. E-mailed.

D. Posted online.

3.2 Event Report/Participant Report

The Event Lead will send the Event and Participant Report to the National Office and within 14 days of the event.

3.2.1 The Participant Report should be a spreadsheet (.csv or .excl) document including columns with the following information for each driver:

A. Driver first name

B. Driver last name

C. SCCA member number

D. Overall position

E. Place in class

F. Time in the car
NOTE: We know that we don't have a comprehensive method for recording driver time in the car. As we work on this, it may be necessary to ask teams to report who is in the car, and to pull from that data.

G. Make/model of vehicle

H. Satisfactory: "Yes" or "No"

I. Class (Abbreviated is acceptable)

J. Event leads are encouraged to also give comments on outstanding positive behavior—especially when the behavior may expedite a license upgrade (e.g., a driver moving up and proving efficient in groups ahead of expected experience).

3.3 Event Audit

The organizer is responsible for completing the post-event audit in MAP Online Sanctioning Dashboard within 14 days following the event.

3.3.1 All drivers listed on the Official Event Results shall be consistent with the number included in the event audit.

3.3.2 Event Fee
The SCCA Race Experience event fees are listed in the Program Event Fees document posted in MAP in the File Cabinet. Event fees must be paid within 30 days of the completion of the event.

A. Expedited Fee
A expedited fee of $250 will be charged on all sanction requests submitted online less than 45 days prior to the event.

3.3.3 Postponement, Abandonment or Cancelation
All or part of an event may be postponed or canceled if a provision for doing

so is made in the Supplementary Regulations for the event or if the Event Lead and Safety Steward (in full agreement) order that all or part of the event be postponed or cancelled for reasons of safety or forces beyond their control.

A. If an entire event (all classes, all sessions) is postponed for more than 24 hours, it is considered to be cancelled, and entry fees shall be returned. If an event is cancelled during the competition, then the entry fees should be prorated by time and a reasonable portion of the entry fee returned.

B. Notification of cancellation must be sent to sanction@scca.com no later than 14 days after the event is cancelled.