ARTICLE 274
2026 FIA FORMULA 4 - TECHNICAL REGULATIONS

SUMMARY

ARTICLE 1 : DEFINITIONS
1.1 Formula 4 car
1.2 Automobile
1.3 Land vehicle
1.4 Bodyworkions
1.5 Wheel
1.6 Complete wheel
1.7 Automobile make
1.8 Event
1.9 Weight
1.10 Engine cubic capacity
1.11 Pressure charging
1.12 Intake system
1.13 Main structure
1.14 Sprung suspension
1.15 Active suspension
1.16 Cockpit
1.17 Survival cell
1.18 Composite structure
1.19 Telemetry
1.20 Semi-automatic gearbox
1.21 Cockpit padding
1.22 Electronically controlled
1.23 Open and closed sections
1.24 Engine
1.25 Power Unit
1.26 Energy Recovery System (ERS)
1.27 Motor Generator Unit (MGU)
1.28 Energy Store (ES)
1.29 DC-DC Converter
1.30 Auxiliary circuit
1.31 Power circuit
1.32 Maximum working voltage
1.33 Battery management system (BMS)
1.34 ES cells

ARTICLE 2 : REGULATIONS
2.1 Role of the FIA
2.2 Publication date for amendments
2.3 Permanent compliance with the regulations
2.4 Measurements
2.5 Technical passport
2.6 Eligible cars
2.7 Changes to car design

© 2024 Fédération Internationale de l'Automobile

ARTICLE 3 : BODYWORK AND DIMENSIONS
3.1 Definitions
3.2 Overall dimensions
3.3 Front wing
3.4 Front bodywork
3.5 Rear bodywork
3.6 Rear wing and rear impact structure
3.7 Floor of the car
3.8 Aerodynamic influence
3.9 Bodywork flexibility

ARTICLE 4 : WEIGHT
4.1 Minimum weight
4.2 Ballast
4.3 Adding during the race

ARTICLE 5 : POWER UNIT
5.1 Power Unit homologation
5.2 General Power Unit specification
5.3 Main Power Unit and intake system dimensions
5.4 Power Unit maximum weight
5.5 Power Unit Control Unit
5.6 General electrical safety
5.7 Power Circuit
5.8 Energy Store (ES)
5.9 Motor Generator Unit (MGU)

ARTICLE 6 : PIPING AND FUEL TANKS
6.1 Fuel tanks
6.2 Fittings and piping
6.3 Crushable structure
6.4 Tank fillers
6.5 Refuelling

ARTICLE 7 : OIL AND COOLING SYSTEMS
7.1 Location of oil tanks
7.2 Longitudinal location of oil system
7.3 Catch tank
7.4 Transversal location of oil system
7.5 Oil replenishment
7.6 Cooling fluids

ARTICLE 8 : ELECTRICAL SYSTEMS
8.1 Starter
8.2 Starting the engine
8.3 Auxiliary battery
8.4 Energy Store (ES) position
8.5 Accident data recorders
8.6 Data logger, sensors, dashboard and/or steering wheel display
8.7 Electrical system connection interfaces
8.8 Throttle fail safe
8.9 Marshalling System / FCY / VSC Interface

© 2024 Fédération Internationale de l'Automobile

ARTICLE 9 : TRANSMISSION TO THE WHEELS
9.1 Gearbox Homologation
9.2 Four wheel drive
9.3 Type of gearbox
9.4 Reverse gear
9.5 Traction control
9.6 Driveshafts
9.7 Semi-automatic gear change system
9.8 Clutch disengagement

ARTICLE 10 : SUSPENSIOIN AND STEERING
10.1 General
10.2 Active suspension
10.3 Chromium plating
10.4 Suspension members
10.5 Suspension dampers
10.6 Sprung suspension
10.7 Springs
10.8 Suspension uprights
10.9 Wheel bearings
10.10 Steering

ARTICLE 11 : BRAKES
11.1 Separate circuits
11.2 Brake discs
11.3 Brake calipers
11.4 Air ducts
11.5 Liquid cooling
11.6 Brake pressure modulation
11.7 Brake pads

ARTICLE 12 : WHEELS AND TYRES
12.1 Location
12.2 Wheel material
12.3 Dimensions and weights
12.4 Maximum number of wheels
12.5 Wheel retention
12.6 Pressure control valves
12.7 Aerodynamic influence

ARTICLE 13 : COCKPIT
13.1 Accommodating different driver sizes
13.2 Cockpit opening
13.3 Steering wheel
13.4 Internal cross section
13.5 Position of the driver’s feet
13.6 Clutch, brake and throttle pedal

ARTICLE 14 : SAFETY EQUIPMENT
14.1 Fire extinguishers
14.2 Master switch
14.3 Rear view mirrors
14.4 Safety belts
14.5 Rear light
14.6 Cockpit padding

© 2024 Fédération Internationale de l’Automobile

14.7 Seat, seat fixing and removal
14.8 Head and neck supports
14.9 Towing device

ARTICLE 15 : CAR CONSTRUCTION
15.1 Materials used for car construction
15.2 Roll structures
15.3 Structure behind the driver
15.4 Survival cell specifications
15.5 Survival cell safety requirements

ARTICLE 16 : IMPACT TESTING
16.1 Conditions applicable to all impact tests
16.2 Frontal test 1
16.3 Frontal test 2
16.4 Rear test
16.5 Steering column test

ARTICLE 17 : ROLL STRUCTURE TESTING
17.1 Conditions applicable to both roll structure tests
17.2 Principal roll structure test
17.3 Secondary roll structure test

ARTICLE 18 : STATIC LOAD TESTING
18.1 Conditions applicable to all static load tests
18.2 Survival cell side strength tests
18.3 Fuel tank floor test
18.4 Cockpit floor test
18.5 Cockpit rim test
18.6 Nose push off test
18.7 Side intrusion test
18.8 Rear impact structure push off test
18.9 Frontal anti-intrusion panel test
18.10 Seat bulkhead test

ARTICLE 19 : FUEL
19.1 Fuel
19.2 Air

ARTICLE 20 : FINAL TEXT

APPENDIX 1 : DRAWINGS

APPENDIX 2 : COMMON CONNECTION INTERFACE

APPENDIX 3 : APPROVAL OF SAFETY STRUCTURES

© 2024 Fédération Internationale de l'Automobile

ARTICLE 1 : DEFINITIONS

1.1 Formula 4 car :

Automobile designed solely for speed races on circuits or closed courses.

1.2 Automobile :

Land vehicle running on at least four non aligned complete wheels, of which at least two are for steering and at least two for propulsion.

1.3 Land vehicle :

A locomotive device propelled by its own means, moving by constantly taking real support on the earth's surface, of which the propulsion and steering are under the control of a driver aboard the vehicle.

1.4 Bodywork :

All entirely sprung parts of the car in contact with the external air stream, except cameras, camera housings, the secondary roll structure and associated fixings and fairings and the parts definitely associated with the mechanical functioning of the Power Unit, transmission and running gear. Airboxes and radiators are considered to be part of the bodywork.

1.5 Wheel :

Flange and rim. Complete wheel: Flange, rim and tyre.

1.6 Complete wheel :

Wheel and inflated tyre. The complete wheel is considered part of the suspension system.

1.7 Automobile make :

In the case of Formula racing cars, an automobile make is a complete car. When the car manufacturer fits a Power Unit which it does not manufacture, the car shall be considered a hybrid and the name of the Power Unit manufacturer shall be associated with that of the car manufacturer. The name of the car manufacturer must always precede that of the Power Unit manufacturer.

Should a hybrid car win a Championship Title, Cup or Trophy, this will be awarded to the manufacturer of the car.

1.8 Event :

An event shall consist of official practice and the race.

1.9 Weight :

Is the weight of the car with the driver, wearing his complete racing apparel, at all times during the event.

1.10 Engine cubic capacity :

The volume swept in the cylinders of the engine by the movement of the pistons. This volume shall be expressed in cubic centimetres. In calculating engine cubic capacity, the number π shall be 3.1416.

1.11 Pressure charging :

Increasing the weight of the charge of the fuel/air mixture in the combustion chamber (over the weight induced by normal atmospheric pressure, ram effect and dynamic effects in the intake and/or exhaust system) by any means whatsoever. The injection of fuel under pressure is not considered to be supercharging.

1.12 Intake system :

All the elements between the cylinder head and the external side of the air restrictor.

© 2024 Fédération Internationale de l'Automobile

1.13 Main structure :

The fully sprung structure of the vehicle to which the suspension and/or spring loads are transmitted, extending longitudinally from the foremost front suspension on the chassis to the rearmost one at the rear.

1.14 Sprung suspension :

The means whereby all complete wheels are suspended from the body/chassis unit by a spring medium.

1.15 Active suspension :

Any system which allows control of any part of the suspension or of the trim height when the car is moving.

1.16 Cockpit :

The volume which accommodates the driver.

1.17 Survival cell :

A continuous closed structure containing all fuel tanks and the cockpit.

1.18 Composite structure :

Non-homogeneous materials which have a cross-section comprising either two skins bonded to each side of a core material or an assembly of plies which form one laminate.

1.19 Telemetry :

The transmission of data between a moving car and anyone connected with the entry of that car.

1.20 Semi-automatic gearbox :

One which, when the driver calls for a gear change, takes over the control of one or more of the Power Unit, clutch and gear selectors momentarily to enable the gear to be engaged.

1.21 Cockpit padding :

Non-structural parts placed within the cockpit for the sole purpose of improving driver comfort and safety. All such material must be quickly removable without the use of tools.

1.22 Electronically controlled :

Any command system or process that utilises semi-conductor or thermionic technology.

1.23 Open and closed sections :

A section will be considered closed if it is fully complete within the dimensioned boundary to which it is referenced, if it is not it will be considered open.

1.24 Engine:

The internal combustion engine including ancillaries, sensors, actuators and control systems necessary for its proper function.

1.25 Power Unit:

The engine, complete with its ancillaries, the energy recovery system and all sensors, actuators and control systems necessary to make them function at all times.

1.26 Energy Recovery System (ERS):

A system that is designed to recover energy from the car, store that energy and make it available to propel the car and, optionally, to drive any ancillaries and actuation systems necessary for its proper function.

© 2024 Fédération Internationale de l'Automobile

1.27 Motor Generator Unit (MGU):

The Motor Generator Unit is the electrical machine mechanically linked to the powertrain as part of the ERS.

1.28 Energy Store (ES):

The part of ERS that stores electrochemical or mechanical energy, including its safety control electronics and a minimal housing.

1.29 DC-DC Converter:

An electronic circuit connected to the Energy Store and whose function is to regulate multi-level voltage outputs for use by the electrical and electronic components of the car and power unit. A DC-DC converter may only consume energy from the energy store and cannot recover energy into the Energy Store. The components directly supplied by the DCDC or indirectly supplied through the non ERS energy storage cannot be used to propel the car or to provide energy to the pressure charging system.

1.30 Auxiliary circuit:

The auxiliary circuit includes the ECU, engine actuators, auxiliary battery, alternator(if fitted), fuel pump, rain light, radio, camera, logger, GCU, gearshift compressor and/or gear shift actuators.

1.31 Power circuit:

The power circuit consists of all those parts of the electrical equipment that are used for driving the vehicle. It includes the ES, its safety management, the inverter, the MGU, cables and harnesses.

1.32 Maximum working voltage:

Highest value of AC voltage (rms) or of DC voltage that can occur under any normal operating conditions according to the manufacturer's specifications, disregarding transients and ripple.

1.33 Battery management system (BMS):

The BMS is a set of important safety systems of the ES. It must detect internal faults and must trigger power reduction delivered from/to the battery or shutdown the ERS if the BMS considers that the ES is operating unsafely.

1.34 ES cells:

The elementary part of the ES that produces and stores electricity through electro-chemical reactions.

© 2024 Fédération Internationale de l'Automobile

ARTICLE 2 : REGULATIONS

2.1 Role of the FIA :

The following technical regulations for Formula 4 cars are issued by the FIA.

2.2 Publication date for amendments :

Each year in December at the latest, the FIA will publish all changes made to these regulations. All such changes will take effect on the second 1st January following their publication.

Changes made for safety reasons may come into force without notice.

2.3 Permanent compliance with regulations :

Automobiles must comply with these regulations in their entirety at all times during an event.

2.4 Measurements :

All measurements must be made while the car is stationary on a flat horizontal surface.

2.5 Technical passport and FIA chassis test report :

All competitors must be in possession of a technical passport for their car which will be issued by the relevant ASN and must accompany the car at all times.

Furthermore, all competitors must be in possession of an FIA chassis test report (see Appendix to the Formula 4 Technical Regulations) for their car which the relevant rolling chassis manufacturer must provide together with each survival cell.

No car will be permitted to take part in an event unless the passport and the FIA chassis test report are available for inspection at initial scrutineering.

2.6 Eligible cars:

Only cars homologated as FIA Formula 4 cars are eligible in an event.

2.7 Changes to car design :

2.7.1 General

The complete car is divided into three types of part.

Type 1: These parts must be supplied by the manufacturer and used exactly as supplied. Repairs may be carried out only by the manufacturer.

Type 2: These parts are Type 1 parts with specific restrictions. Only the modifications indicated in the homologation may be carried out. Repairs are allowed only in the range described in the homologation.

Type 3: These parts are unrestricted, provided that they are used as designed by the manufacturer and do not fulfil any additional function.

The above-mentioned parts classification and the user manual form part of the homologation, both documents will be supplied by the respective manufacturer.

The adding of colour or thin adhesive film up to a thickness of 0.5 mm is not considered as a modification, provided that the colour or film fulfils only an optical function.

© 2024 Fédération Internationale de l'Automobile

2.7.2 Standard mounting parts

Standard mounting parts, such as screws, nuts, bolts, washers and lock washers, are considered as Type 3 parts unless specifically mentioned in the homologation. They may be replaced with equivalent or superior standard parts.

The thread type, size, length and pitch must remain the same.
In case the connection remains intact and the standard mounting part doesn't fulfil any additional functionality, the thread type and pitch are free and the size and length may be increased.

The use of locking wire is permitted.

Any type of standard mounting part which has an influence on the car set-up is considered as a Type 1 part unless specifically mentioned in the homologation.

Only Type 3 washers may be removed.

Washers may be added only for facilitating and improving mechanical installation. They may influence the set-up of the car only when specifically mentioned in the homologation.

2.7.3 Protections

Heat protections, mechanical protections (such as abrasion protection or tape) and protections for driver comfort may be added, provided that their sole function is the protection of the relevant element and unless specifically mentioned in the homologation.

2.7.4 Bodywork

The modification of bodywork parts and bodywork supports is allowed only to ensure proper installation despite manufacturing tolerances.

2.7.5 Quick couplings

The use of quick couplings for brake, clutch and fuel lines is allowed, provided that FIA-approved dry couplings are used.

© 2024 Fédération Internationale de l'Automobile

ARTICLE 3 : BODYWORK AND DIMENSIONS

3.1 Definitions

3.1.1 Wheel centre line :

The centre line of any wheel shall be deemed to be half way between two straight edges, perpendicular to the surface on which the car is standing, placed against opposite sides of the complete wheel at the centre of the tyre tread.

3.1.2 Height measurements :

All height measurements will be taken normal to and from the reference plane defined in Article 3.7.1.

3.1.3 Distances

All measurements relative to wheel centre lines, car centre plane and survival cell planes (referring to Drawing 1) will be taken parallel to the reference plane defined in Article 3.7.1.

3.2 Overall dimensions

3.2.1 Height

No part of the bodywork may be higher than 960mm above the reference plane.

3.2.2 Width

The overall width of the car including complete wheels shall not exceed 1750mm, with the steered wheels in the straight ahead position.

Bodywork width between the front wheel centre line and 150mm behind the rear wheel centre line must not exceed 1450mm.

Bodywork more than 150 mm behind the rear wheel centre line must not exceed 900mm in width.

3.2.3 Overhangs :

No part of the car may be more than 840mm behind the rear wheel centre line or more than 1200mm in front of the front wheel centre line.

No part of the bodywork more than 200mm from the car centre plane may be more than 1000mm in front of the front wheel centre line.

3.2.4 Wheelbase and track :

Wheelbase	:	2750mm-2950mm.
Minimum track	:	1200mm.

© 2024 Fédération Internationale de l'Automobile

3.3 Front wing

3.3.1 Overall dimensions

All bodywork situated more than 430mm forward of the front wheel centre line and more than 200mm from the car centre plane, must be within the volume defined be the following planes:

- Two planes parallel to, 50mm and 340mm above the reference plane;

- Two planes parallel to C-C and 430mm and 1000mm forward of the front wheel centre line;

- A plane parallel to and 700mm from the car centre plane.

3.3.2 Exclusion zone

No bodywork is allowed inside a volume formed by the reference plane, two longitudinal planes which run normal to the reference plane and 700mm parallel to the car centre plane either side and two planes which run normal to the reference plane and parallel to and 430mm and 1200mm forward of the front wheel centre line, except for the following components :

a) Homologated frontal impact absorbing structure.

b) Homologated front wing hangers including homologated spacer to adjust the front wing main plane angle.

c) Homologated front wing main plane.

d) Homologated front wing endplates

e) Homologated front wing gurneys

3.3.3 Front Wing Main Plane

The aerofoil section of the front wing must conform to the sets of dimensions given in Drawing 2. Each of the dimensions given must remain nominally at the same height above the reference plane and the same distance to C-C over the entire width.

A tolerance of $\pm$ 1.0 mm will be permitted on any stated dimension.

With the exception of the lateral extremities (the front wing end plates) and the fixation points (inserts / holes) for the homologated front wing hangers and for additional front wing gurneys, the front wing main plane must be a single, smooth, rigid, continuous element without any slots, gaps, attachments or dividers in order that only one single continuous section may be contained within any cross section taken parallel to the car centre plane and normal to the reference plane.

3.3.4 Endplates

The lateral extremities of any bodywork forward of the front wheels must fit in the volume formed by planes running 685mm and 700mm parallel to the car centre plane and normal to the reference plane, 430mm and 1000mm forward and parallel to the front wheel centre line and normal to the reference plane and 50mm and 340mm above and parallel to the reference plane.

The front wing end plates must be a flat plate orientated vertically to the reference plane and parallel to the car centre plane.

The lateral extremities must incorporate a flat, rectangular and vertical surface, parallel to the car centre plane with a minimum length of 300mm and a minimum height of 100mm, which is visible form the side of the car.

The lateral extremities of the front wing assembly (the front wing end plates) must directly attached to the homologated front wing main plane (meaning no other parts are allowed between the homologated front wing main plane and the front wing end plate).

© 2024 Fédération Internationale de l'Automobile

In order to prevent tyre damage to other cars, the lateral extremities of any bodywork forward of the front wheels must be at least 10mm thick (being the minimum distance when measured normal to the surface in any direction) all extremities must have a minimum radius of 5mm. Screw heads and washers for the sole purpose of attaching the end plates to the wing will be ignored when assessing whether the car is in compliance with Article 3.3.

3.3.5 Additional Front Wing Gurneys

On either side of the car, within 15 mm from the trailing edge of the front wing main plane, one L-shaped gurney flap with a height of maximum 15 mm may be attached (above and below). For this purpose, homologated inserts/holes are permitted in this area.

3.4 Front bodywork

3.4.1 Nose and chassis maximum height

Referring to the planes defined in Article 15:

In side view, no bodywork may extend above the following lines:

- A horizontal line from a point 1200mm forward of the front wheel centre line to a point on D-D and 200mm above the reference plane
- A diagonal line from a point on D-D and 200mm above the reference plane and a point on A-A and 580mm above the reference plane
- A diagonal line from a point on A-A and 580mm above the reference plane and a point on the front wheel centre line and 600mm above the reference plane
- A diagonal line from a point on the front wheel centre line and 600mm above the reference plane to a point on B-B and 610mm above the reference plane
- A horizontal line from a point on B-B to a point 790mm forward of C-C and 610mm above the reference plane
- A horizontal line from a point 790mm forward of C-C to a point 550mm forward of C-C and 570mm above the reference plane

Referring to Drawing 3, in addition, no bodywork between A-A and B-B is may be above the planes created by a linear taper between the following lines:

- On A-A: a horizontal line, normal and symmetrical to the car centre plane, 240mm wide and 580mm above reference plan and two lines, starting from a point 120 mm from the car centre plane and 580mm above the reference, facing outboard and downwards with an angle of 175,0° to the horizontal line
- On the FWCL: a horizontal line, normal and symmetrical to the car centre plane, 240mm wide and 600mm above reference plan and two lines, starting from a point 120 mm from the car centre plane and 600mm above the reference, facing outboard and downwards with an angle of 166,0° to the horizontal line
- On B-B: a horizontal line, normal and symmetrical to the car centre plane, 160mm wide and 610mm above reference plan and two lines, starting from a point 80 mm from the car centre plane and 610 mm above the reference, facing outboard and downwards with an angle of 166,0° to the horizontal line

The only exception to the restriction stated in the Article above are the front wing endplates as defined in Article 3.3.4, antennas and a transparent windscreen.

© 2024 Fédération Internationale de l'Automobile

3.4.2 Exclusion volume under the nose and chassis

In side view, there must be no bodywork in the area formed by the following planes :

- two vertical planes, one 430mm forward of and one 450mm behind the front wheel centre line
- a horizontal plane 140 mm above the reference plane
- and a plane normal to the car centre plane running through a point 140mm above the reference plane at A-A and a point 118mm above the reference and 450mm behind the FWCL.

3.4.3 Exclusion volume around the front wheels

With the exception of the rear view mirrors, in plan view, there must be no bodywork in the area enclosed by the intersection of the following lines:

a) A longitudinal line parallel to and 875mm from the car centre plane.

b) A transverse line 430mm forward of the front wheel centre plane.

c) A diagonal line from a point 430mm forward of the front wheel centre plane and 200mm from the car centre plane to a point 815mm forward of C-C and 340mm from the car centre plane.

d) A diagonal line running rearwards and outwards, from a point 815mm forward of the plane C-C and 340mm from the car centre plane, at an angle of 60° to the car centre plane.

This does not apply to any parts of the rear view mirrors (including their supports), which are visible in the described area, provided each of these areas does not exceed 9000mm² when projected to a plane above the car which is parallel to the reference plane. The rear view mirror supports must have a circular cross section.

3.4.4 Except for the front wing assembly defined by Article 3.3, the attachment of the frontal impact-absorbing structure, the cockpit rim edge, the inside of the cockpit and a transparent windscreen, any vertical cross section normal or parallel to the car centre plane of any bodywork visible from above, between B-B and D-D, which is less than 250 mm from the car centre plane, may only have a continuous shape with a minimum radius of 15 mm.

3.4.5 Except for the rear view mirrors, the rollover structures, the cockpit rim edge, the inside of the cockpit, the windscreen and the attachment of the frontal impact-absorbing structure, any intersection of any bodywork more than 60mm above the reference plane lying between 430 mm forward of the front wheel centre line and 560 mm forward of C-C which is visible from above or beneath the car, with a lateral or longitudinal vertical plane should form one continuous line, with a minimum radius of 10 mm which is visible from above and beneath the car respectively.

3.5 Rear bodywork

3.5.1 Space for Power Unit and intake system:

The car must be designed such that a Power Unit and intake system, bellhouse + gearbox with the maximum defined by the template given in Drawing 4 may be fitted.

Once the relevant bodywork surfaces are defined in accordance with present Technical Regulations, if necessary for the installation of Power Unit, bellhouse or gearbox, it must be possible to add local extensions to the defined bodywork.

3.5.2 Space for exhaust system:

The sidepods must be designed such that an exhaust system including a cylindrical muffler with a diameter of 150 mm and a length of 500 mm may be fitted on either side of the car.

© 2024 Fédération Internationale de l'Automobile

3.5.3 Engine cover

a) With the exception of the opening described in 15.2.7, when viewed from the side, the car must have bodywork in the area bounded by the following five lines:

one vertical 30mm behind C-C,

one horizontal 400mm above the reference plane,

one horizontal 940mm above the reference plane,

one vertical 100mm behind the rear wheel centre line and

one diagonal which intersects the 940mm horizontal at a point 150mm behind C-C and the 100mm vertical at a point 630mm above the reference plane.

With exception of the local extensions mentioned in Article 3.5.1, any bodywork within this area must be arranged symmetrically about the car centre plane and, when measured 200mm vertically below the diagonal boundary line, must have minimum widths of 150mm and 50mm respectively at points lying 150mm behind C-C and 100mm behind the rear wheel centre line. This bodywork must lie on or outside the boundary defined by a linear taper between these minimum widths.

b) Bodywork lying vertically above the upper boundary as defined in a) may be no wider than 125mm and must be arranged symmetrically about the car centre plane.

c) When viewed from the side, no bodywork forward of a point 150mm behind the rear wheel centre line may lie above a line parallel to the diagonal boundary defined in a) and intersecting the rear wheel centre line 690mm above the reference plane.

d) Bodywork more than 250mm above the reference plane, lying between the rear wheel centre line and 150mm behind the rear wheel centre line, may be no more than 200mm from the car centre plane.

3.5.4 Sidepods height and width

a) Other than the rear view mirrors, no bodywork situated between the front and the rear wheel centre line, which is more than 550mm above the reference plane, may be more than 370mm from the car centre plane.

b) In plan view, there must be no bodywork forward of a point lying 150mm behind the rear wheel centre line and more than 250mm above the reference plane, which is outside of a diagonal line running forward and outwards, from a point 150mm behind the rear wheel centre line and 470mm from the car centre plane at an angle of 11° to the car centre plane.

3.5.5 Sidepods leading edge

No part of the area enclosed by the intersection of the following lines, on a plane 450mm above and parallel to the reference plane, may be visible from directly above the car:

a) A longitudinal line parallel to and 580mm from the car centre plane.

b) A longitudinal line parallel to and 340mm from the car centre plane.

c) A diagonal line running rearwards and outwards, from a point 675mm forward of the plane C-C and 340mm from the car centre plane, at an angle of 60° to the car centre plane.

d) A diagonal line running rearwards and outwards, from a point 475mm forward of the plane C-C and 340mm from the car centre plane, at an angle of 60° to the car centre plane.

© 2024 Fédération Internationale de l'Automobile

3.5.6 Power Unit cooling ducts :

The area of the air ducts used for cooling the Power Unit must exceed 75,000mm² in total. This will be measured to a projection onto a plane vertical to the reference plane and normal to the car centre plane and must be maintained up to the radiator surface. Further any intersection taken normal to the car centre plane and vertical to the reference plane must from a continuous line up to the radiator.

All air entering the ducts must pass through an intercooler (if applicable), an oil cooler, a water radiator or an air duct fitted for the sole purpose of cooling a specific car component.

Devices for the sole purpose of connecting the floor to the chassis and to protect the radiators are allowed within the radiator duct and may pass through the bodywork. The devices and passages through the bodywork must have a circular cross section with a diameter no greater than 5 mm and 7 mm respectively or a rectangular cross section of 25 mm x 2 mm and 30 mm x 5 mm respectively.

3.5.7 Bodywork shape (R75 rule)

Any vertical cross section of bodywork parallel to the plane C-C situated in the volumes defined below must form one tangent continuous curve on its external surface. This tangent continuous curve may not contain any radius less than 75mm:

a) The volume between the rear wheel centre line and 300mm rearward of the plane C-C, which is more than 25mm from the car centre plane and more than 600mm above the reference plane.

b) The volume between 50mm and 600mm forward of the rear wheel centre, which is more than 410mm from the car centre plane and more than 200mm above the reference plane.

c) The volume between 600mm forward of the rear wheel centre line and 530mm forward of the plane C-C, which is more than 410 mm from the car centre plane and more than 100mm above the reference plane.

The surfaces lying within these volumes, which are situated more than 250mm forward of the rear wheel centre line, must not contain any apertures (other than those permitted by Article 3.5.9) or contain any vertical surfaces which lie parallel to the plane C-C.

3.5.8 Apertures

Once the relevant bodywork surfaces are defined in accordance with Article 3.5.8, apertures may be added for the following purposes only :

a) A single aperture on either side of the car centre plane for the purpose of the exhaust exit. The bodywork edge of this aperture may have a maximum distance of 10mm to any point lying on the circumference of the exhaust pipe.

b) Rectangular apertures on either side of the car centre plane for the purpose of allowing suspension members and driveshafts to protrude through the bodywork. No such aperture may have an area greater than 5,000mm² when projected onto the surface itself. No point of such an aperture may be more than 100mm from any other point on the aperture.

c) Apertures on either side of the car centre plane for the sole purpose increasing the airflow through the cooling systems of the car.

The bodywork edges of these apertures must be such that

- no spherical object with a diameter larger than 100mm may protrude entirely inside the bodywork. (When stipulating the compliance with this requirement, only bodywork surfaces that seen in side and plan view are wider than 25mm in two dimensions, will be taken into account.)

- in side and plan view, no part inside the bodywork is visible

© 2024 Fédération Internationale de l'Automobile

- a maximum surface of 50,000 mm² per side of relevant bodywork surfaces in accordance with Article 3.5.8 have been modified

3.6 Rear wing and rear impact structure

3.6.1 Height

No part of the bodywork behind the rear wheel centre line may be more than 800mm above the reference plane.

Except for the rear light and the rear impact structure required in Article 15.5.2, no bodywork situated more than 150mm behind the rear wheel centre line may be less than 250 mm above the reference plane.

The above mentioned restrictions will be applied except for the following components:

a) homologated rear impact-absorbing structure;

b) homologated rear wing support;

c) homologated gearbox casing;

d) homologated rear light;

e) homologated jacking points attached to the rear impact-absorbing structure.

3.6.2 Rear wing profiles

No bodywork behind a point lying 150mm behind the rear wheel centre line may incorporate more than two aerofoil sections.

The bodywork above a horizontal plane 525mm above the reference plane must incorporate one aerofoil sections, conforming to the dimensions given in Drawing 5.

The bodywork underneath a horizontal plane 525mm above the reference plane must incorporate one aerofoil section, conforming to the dimensions given in Drawing 6.

Each of the dimensions given must remain nominally at the same height above the reference plane over the entire width of the relevant aerofoil section.

No holes, apertures or slots are permitted in any of these aerofoil sections.

No trim tabs may be added to any of these aerofoil sections.

3.6.3 Endplates

a) In side view, the projected area of any bodywork lying between 250mm and 800mm above the reference plane and between a point 150mm behind the rear wheel centre line and a point 810mm behind it and more than 400mm from the car centre plane must be greater than 196000mm².

b) In side view, no bodywork rearward of a point 150mm behind the rear wheel centre line, and between 200mm and 500mm from the car centre plane, may be situated vertically above a diagonal line which has the forward point 250mm above the reference plane and 150 behind the rear wheel centre line and the rearward point 800mm above the reference plane and 410mm rearward of the rear wheel centre line.

c) In side view, no bodywork rearward of a point 150mm behind the rear wheel centre line, and between 200mm and 450mm from the car centre plane, may be situated rearward of a diagonal line which has the forward point 250mm above the reference plane and 550mm rearward of the rear wheel centre line and the rearward point 800mm above the reference plane and 810mm rearward of the rear wheel centre line.

d) The rear wing endplates must be a flat plate. Holes, apertures or slots are permitted only for the fixation and adjustment of the aerofoil sections mentioned in Article 3.6.2. No part of the rear wing endplates may be less than 440mm from the car centre plane.

© 2024 Fédération Internationale de l'Automobile

3.7 Floor of the car

Compliance with this Article must be demonstrated with all unsprung parts of the car removed.

3.7.1 Floor width

In plan view, there must be no bodywork forward of a point lying 150mm behind the rear wheel centre line, which is outside of a diagonal line running forward and outwards, from a point 150mm behind the rear wheel centre line and 570mm from the car centre plane at an angle of 11.0° to the car centre plane.

3.7.2 Step and reference planes

All sprung parts of the car situated :

- more than 450mm behind the front wheel centre line
- forward of a point lying 150mm behind the rear wheel centre line
- inside of a diagonal line running forward and outwards, from a point 150mm behind the rear wheel centre line and 465mm from the car centre plane at an angle of 11° to the car centre plane
- with exception of parts between the rear wheel centre line and a point 280mm forward of the rear wheel centre which are less than 160mm form the car centre plane

All sprung parts of the car situated in the above defined area, which are visible from underneath, must form surfaces which lie on one of two parallel planes, the reference plane or the step plane or in the transition area between these two planes. This does not apply to any parts of rear view mirrors which are visible, provided each of these areas does not exceed 9000mm² when projected to a horizontal plane above the car. The step plane must be 50mm above the reference plane.

Additionally, the surface formed by all parts lying on the reference plane must :

a) Cover the area which is bounded by two transversal lines, one 450mm behind the front wheel centre line and the other one 280 mm forward of the rear wheel centre line, and two longitudinal lines 150mm either side of the car centre plane.

b) Have maximum widths of 500mm.

c) Be symmetrical about the car centre plane.

d) Be made of wood at least 9.5mm thick.

For the sole purpose of incorporating a larger flywheel, a cut-out, symmetrical to the car centre plane with a maximum width of 180 mm, maximum length of 120 mm and a maximum depth of 5 mm, may be added on the upper side.

All parts lying on the reference and step planes, in addition to the transition between the two planes, must produce uniform, solid, hard, continuous, rigid (no degree of freedom in relation to the body/chassis unit), impervious surfaces under all circumstances.

The peripheries of the surfaces formed by the parts lying on the reference and step planes may be curved upwards with maximum radii of 25 and 50mm respectively. The surface formed by the parts lying on the reference plane must be connected at its extremities vertically to the parts lying on the step plane and any radius which forms the transition between the two planes may have a maximum radius of 25mm. The order in which the above mentioned radii are applied to parts lying at the same time in the transition area and in the periphery, is free.

All sprung parts between the rear wheel centre line and a point 280mm forward of the rear wheel centre which are less than 160mm from the car centre plane and visible from underneath must form surfaces which lie between the reference plane and the step plane or on the reference or the step plane. All parts lying in this area must produce uniform, solid,

© 2024 Fédération Internationale de l'Automobile

hard, continuous, rigid (no degree of freedom in relation to the body/chassis unit), impervious surfaces under all circumstances. Any intersection, in the above mentioned area, of any bodywork visible from beneath the car with a lateral or longitudinal vertical plane should form one continuous line which is visible from beneath and beside the car.

Any intersection of any bodywork between the rear wheel centre line and a point 220mm forward of the rear wheel centre which is less than 160mm form the car centre plane and visible from underneath with a lateral or longitudinal vertical plane should form one continuous line with a minimum radius of 10 mm.

The peripheries of the surfaces formed by the parts, lying on or between the reference and step planes, between the rear wheel centre line and a point 280mm forward of the rear wheel centre line, may be curved upwards with maximum radii of 25.

3.7.3 Tolerances

To help overcome any possible manufacturing problems, and not to permit any design which may contravene any part of these regulations, dimensional tolerances are permitted on bodywork situated more than 450mm behind the front wheel centre line and more than 150mm forward of the rear wheel centre line.

A vertical tolerance of +/- 5 mm is permissible across the surfaces lying on the reference and step planes and a horizontal tolerance of 5 mm is permitted when assessing whether a surface is visible from beneath the car.

3.7.4 Floor tunnel height

All sprung parts of the car outside of a diagonal line running forward and outwards, from a point 150mm behind the rear wheel centre line and 465mm from the car centre plane at an angle of 11° to the car centre plane which are visible from underneath, must be between 50mm and 100mm above the reference plane.

Any intersection, in the above mentioned area, of any bodywork visible from beneath the car with a lateral or longitudinal vertical plane should form one continuous line which is visible from beneath the car.

3.7.5 Skid block :

Beneath the surface formed by all parts lying on the reference plane, a rectangular skid block must be fitted. This skid block may comprise more than one piece but must :

a) Extend longitudinally from a point lying 450mm behind the front wheel centre line to a point lying 280mm forward of the rear wheel centre line.

b) Be made from wood or an alternative uniform material approved by the FIA during the homologation process.

c) Have a width of 300mm with a tolerance of +/- 2mm.

d) Have a minimum thickness of 2.0 mm.

e) Have a uniform thickness of at least 5mm when new.

f) Have no holes or cut outs other than those necessary to fit the skid block to the car.

g) Have four precisely placed 80mm diameter holes the positions of which are detailed in Drawing 7.

h) Be fixed symmetrically about the car centre plane in such a way that no air may pass between it and the surface formed by the parts lying on the reference plane.

The front and rear edge of a new skid block may be chamfered over a distance of 50mm to a depth of 3mm.

In order to establish the conformity of the skid block after use it's thickness will only be measured around the four 80mm diameter holes, the minimum thickness must be respected in at least one place on the circumference of all four holes.

© 2024 Fédération Internationale de l'Automobile

3.7.6 Floor, reference plane and skid block protection :

For the sole purpose of protection the floor, reference plane and skid block against excessive wear, the materials prescribed in Articles 3.7.2 and 3.7.5 may be substituted in the following area:

- less than 50mm above reference plane
- less than 250mm from the car centre plane
- between 450 mm and 550 mm behind the front wheel centre line

The substituted material must comply to dimensional requirements of Article 3.7

The substituted material must be approved by FIA during the homologation process.

3.8 Aerodynamic influence :

Any specific part of the car influencing its aerodynamic performance (with the exception of non-structural shrouds protecting wheel tethers which are being used solely for this purpose):

a) Must comply with the rules relating to bodywork.

b) Must be rigidly secured to the entirely sprung part of the car (rigidly secured means not having any degree of freedom).

Any specific part of the car influencing its aerodynamic performance must remain immobile in relation to the sprung part of the car.

Any device or construction that is designed to bridge the gap between the sprung part of the car and the ground is prohibited under all circumstances.

No part having an aerodynamic influence and no part of the bodywork, with the exception of the skid block in Article 3.7.5 above, may under any circumstances be located below the reference plane.

Any car system, device or procedure which uses driver movement as a means of altering the aerodynamic characteristics of the car is prohibited.

3.9 Bodywork flexibility :

3.9.1 Bodywork may deflect no more than 5mm vertically when a 50 kg load is applied vertically to it 860mm forward of the front wheel centre line and 550mm from the car centre plane, this point being the centre of the below described adapter. The load will be simultaneously applied on both sides of the front wing main plane in a downward direction using a rectangular adapter 300mm long and 150mm wide with the 300mm edges running parallel to the car centre plane. The adapter must follow the shape of the front wing in the above defined area and the teams must supply the latter when such a test is deemed necessary. During the test the car must sit on the skid block and the deflection is measured on both sides of the front wing main plane and at the car centre plane, the car centre plane figure being deducted from the LHS and RHS figures.

3. 9.2 Any bodywork facing the ground must remain in compliance with Article 3.7 when a load of 10kg is applied vertically to it at its outermost point directly in front of the rear wheels. The load will be simultaneously applied on both sides of the car in a downward direction.

3. 9.3 In order to ensure that the requirements of Article 3.9 are respected, the FIA reserves the right to introduce further load/deflection tests on any part of the bodywork which appears to be (or is suspected of), moving whilst the car is in motion.

© 2024 Fédération Internationale de l'Automobile

ARTICLE 4 : WEIGHT

4.1 Minimum weight :

The minimum weight has to be defined in the Sporting Regulations of each F4 Championship.

The minimum weight may not be less than the homologation weight (for each rolling chassis and engine combination as per Article 2.5 of the FIA F4 2nd Gen Homologation Regulations) plus minimum 75kg for the driver.

4.2 Ballast :

Ballast can be used provided it is secured in such a way that tools are required for its removal. It must be possible to fix seals if deemed necessary by the scrutineers.

4.3 Adding during the race :

The adding to the car during the race of any liquid or other material whatsoever or the replacement during the race of any part with another materially heavier is forbidden.

© 2024 Fédération Internationale de l'Automobile

ARTICLE 5: POWER UNIT

5.1 Power Unit homologation:

Only Power Unit which have been homologated in accordance with the Formula 4 Homologation Regulations may be used during an event.

All such Power Units should be delivered in such a condition that the seals can be fitted.

5.2 General power unit specification:

5.2.1 Only 4-stroke (Otto principle) engines with reciprocating pistons are permitted.

5.2.2 Turbocharged engines are permitted.

5.2.3 The engine may be structural or be fitted with an additional space frame.

5.3 Main Power Unit and intake system dimensions:

5.3.1 The height of the crankshaft rotational axis must 160mm +/- 1mm above the reference plane.

5.3.2 The Power Unit -to-chassis mounting points must be arranged in accordance with Drawing 8.

5.3.3 The Power Unit including bell housing or space frame and intake system must comply with the maximum dimensions given in Drawing 4. If necessary for the installation of the Power Unit, local extensions may be added.

5.3.4 All air feeding the engine must pass through the principal roll structure of the car.

5.4 Power Unit maximum weight:

The complete weight of the Power Unit homologation perimeter, as defined in the FIA Formula 4 Homologation Regulations Article 3.7, may be no more than 150.0kg.

5.5 Power Unit Control Unit:

5.5.1 The ECU and Power Unit loom must provide the common connector defined by Article 8.7.

The ECU must provide the datalogger functionality as defined in Article 8.6.

5.5.2 The Power Unit manufacturer must provide a mechanism that allows the scrutineers to accurately identify the ECU software version loaded.

5.5.3 The following channels must be available via CAN for the chassis data logging system:

- Throttle pedal position
- Engine rpm
- Auxiliary battery voltage
- Water temperature
- Oil temperature
- Oil pressure
- ERS and Power Unit error codes.

5.5.4 The following channels, when they exist, must be available for Power Unit support and scrutineering purposes only:

- Ignition cut
- Ignition timing
- Injection timing
- Fuel mass
- Global fuel mass correction factor
- Lambda

© 2024 Fédération Internationale de l'Automobile

- Air temperature
- Airbox/inlet pressure
- Throttle valve position
- MGU: Speed and temperatures (winding, rotor, bearings)
- Inverter: Power Module temperature, Iq and Id current and existing diagnostic channel
- ES: State of charge, cells temperature, voltage, current and existing diagnostic channel.
- DCDC: Voltages, currents, temperatures and existing diagnostic channels.

5.6 General electrical safety:

The maximum working voltage on the car must never exceed 60V DC or 30V AC.

5.7 Power circuit:

The outer covering of cables and harness of the traction circuit not within enclosures or behind barriers shall be marked in purple or orange.

Power circuit cables and harnesses must be inside the bodywork.

5.8 Energy Store (ES)

Liquid cooling is forbidden.

The ES must be surrounded by a fire proof enclosure (V0 level of acceptance respecting the "UL94" US standard).

The technology for the ES is free but it must have the suitable UN certification for transportation.

The Energy Store must be equipped with a contactor which will isolate the ES cells of the other parts of the car when a shutdown is requested.

The Energy Store must be equipped with a fuse to protect the ERS in case of a short circuit. The fuse shall be located as close as possible to the ES cells.

The energy store must be equipped with a BMS. Should it be required due to the technology of the ES, the ES must be fitted with a pressure release valve. The vapour exiting this valve must be directed outside the cockpit.

External charging of the Energy Store during pitstops is prohibited.

5.9 Motor Generator Unit (MGU)

The MGU must be mechanically linked to the engine before the main clutch.

© 2024 Fédération Internationale de l'Automobile

ARTICLE 6 : PIPING AND FUEL TANKS

6.1 Fuel tanks :

6.1.1 The fuel tank must be a single rubber bladder conforming to or exceeding the specifications of FIA Standard FT3-1999, the fitting of foam within the tank however is not mandatory. A list of approved materials may be found in FIA Technical List No.1 (List of fuel bladders homologated according to the FIA Standards FT3-1999, FT3.5-1999, FT5-1999) on the FIA website.

The fuel system must comply to the fuel system guidelines. Details of the guidelines can be found in the Appendix to the Technical Regulations.

6.1.2 When viewed in lateral projection, all the fuel stored on board the car must be situated between the front face of the Power Unit and the line a-b-c in Drawing 9.

Furthermore, no fuel can be stored more than 300mm forward of point c) in Drawing 9.

However, a maximum of 2 litres of fuel may be kept outside the survival cell, but only that which is necessary for the normal running of the engine.

6.1.3 Fuel must not be stored more than 400mm from the longitudinal car centre plane.

6.1.4 No rubber bladders shall be used more than five years after the date of manufacture, unless inspected and recertified by the manufacturer for a period of up to another two years.

6.2 Fittings and piping :

6.2.1 All apertures in the fuel tank must be closed by hatches or fittings which are secured to metallic or composite bolt rings bonded to the inside of the bladder.

The bolt holes edges must be no less than 5mm from the edge of the bolt ring, hatch or fitting.

All hatches and fittings must be sealed with the gaskets or "O" rings supplied with the tank.

6.2.2 All fuel lines between the fuel tank and the engine must have a self sealing breakaway valve. This valve must separate at less than 50% of the load required to break the fuel line fitting or to pull it out of the fuel tank.

6.2.3 No lines containing fuel, cooling water or lubricating oil may pass through the cockpit.

6.2.4 All lines must be fitted in such a way that any leakage cannot result in the accumulation of fluid in the cockpit.

6.2.5 No hydraulic fluid lines may have removable connectors inside the cockpit.

6.2.6 When flexible, all lines must have threaded connectors and an outer braid which is resistant to abrasion and flame.

6.2.7 All fuel and lubricating oil lines must have a minimum burst pressure of 41bar at the maximum operating temperature of 135°C.

6.2.8 All hydraulic fluid lines which are not subjected to abrupt changes in pressure, with the exception of lines under gravity head, must have a minimum burst pressure of 408bar at the maximum operating temperature of 204°C when used with steel connectors and 135°C when used with aluminium connectors.

6.2.9 All hydraulic fluid lines subjected to abrupt changes in pressure must have a minimum burst pressure of 816 bar at the maximum operating temperature of 204°C.

6.2.10 All components containing fuel at a pressure greater than 10bar must be located outside the fuel tank.

6.3 Crushable structure :

The fuel tank must be completely surrounded by a crushable structure, which is an integral part of the survival cell and must be able to withstand the loads required by the test in Article 18.3.

© 2024 Fédération Internationale de l'Automobile

6.4 Tank fillers :

6.4.1 Tank fillers must not protrude beyond the bodywork. Any breather pipe connecting the fuel tank to the atmosphere must be designed to avoid liquid leakage when the car is running or if upside down and its outlet:

- Must not be less than 250mm from the cockpit opening;
- Must be placed where they would not be vulnerable in the event of an accident;
- Must not protrude beyond the surface of the bodywork;
- Must be fitted with a gravity actuated roll-over valve and a float chamber ventilation valve

The introduction of the above changes is mandatory from 01.08.2022.

6.4.2 All cars must be fitted with a self sealing connector which can be used by the scrutineers to obtain fuel from the tank.

This connector must be the type approved by the FIA.

6.5 Refuelling:

6.5.1 Refuelling at any time is only allowed through a self-sealing connector.

6.5.2 Refuelling during the race is forbidden.

6.5.3 Refuelling the car on the grid by any other means than by gravity from a maximum head of two metres above the ground is forbidden.

6.5.4 Any storage of fuel on board the car at a temperature of more than ten degrees centigrade below the ambient temperature is forbidden.

6.5.5 The use of any specific device, whether on board or not, to decrease the temperature of the fuel below the ambient temperature is forbidden.

The introduction of the above changes is mandatory from 01.08.2022.

© 2024 Fédération Internationale de l'Automobile

ARTICLE 7 : OIL AND COOLING SYSTEMS

7.1 Location of oil tanks :

All oil storage tanks must be situated between the front wheel axis and the rearmost gearbox casing longitudinally, and if situated outside the main structure of the car they must be surrounded by a 10mm thick crushable structure.

No part of the oil reservoir for engine lubrication may be situated more than 200mm laterally from the car centre plane. The oil reservoir must be located between the rear face of the engine and the rear wheel centre line longitudinally.

7.2 Longitudinal location of oil system :

No other part of the car containing oil may be situated behind the complete rear wheels.

7.3 Catch tank :

When a car's lubrication system includes an open type sump breather, this breather must vent into a catch tank of at least 2 litres capacity.

The use of additional vent pipes for the purpose of venting a catch tank rearwards to the back of the car is not permitted. Measures must be taken to ensure that no liquid can leak from any aeration system.

7.4 Transversal location of oil system :

No part of the car containing oil may be more than 660mm from the car centre plane.

7.5 Oil replenishment :

No oil replenishment is allowed during a race.

7.6 Cooling fluids :

Only ambient air, water, anti-freeze and oil are permitted in the car cooling systems.

© 2024 Fédération Internationale de l'Automobile

ARTICLE 8 : ELECTRICAL SYSTEMS

8.1 Starter:

A starter with an electrical or other source of energy carried aboard the car, and able to be controlled by the driver when seated normally, must be fitted.

The starter must be capable of starting the engine at all times.

An exception to this requirement may be granted if an MGU is fitted with enough capability.

8.2 Starting the engine :

A supplementary device temporarily connected to the car may be used to start the engine both on the grid and in the pits.

8.3 Auxiliary battery:

The auxiliary battery must be installed inside the survival cell, on the floor behind the driver's seat.

The use of a battery with any kind of lithium technology is only allowed if a BMS forms an integral part of the battery.

8.4 Energy Store (ES) position:

The ES must be located either in the survival cell or in a protected enclosure. In any case the ES must be isolated from the cockpit.

No part of the ES may lie:

- In front of the forward most point of the back of driver’s seat
- Behind the engine
- More than 350mm from the car centre plane.

8.5 Accident data recorders :

All cars must be equipped with an accident data recorder approved according to FIA Standard 8872-2018 (Technical list n°88) which will have to be installed according to the “Installation specification for FIA-approved 8872-2018 accident data recorder (ADR)”.

The relevant systems of the vehicle shall provide the inputs specified in the ADR’s installation specifications and respective user manual.

The CAN protocol, PIN-out and led scheme are provided in the ADR manufacturer’s user manual.

At any time following an accident or incident, the recorded data from the ADR device must be made available to the FIA when requested.

The competitor agrees that the data ownership rights of any and all data recorded by the ADR should be assigned to the FIA in perpetuity.

The following connections must be provided for the ADR:

- 2 pins for a 12V power supply (including ground)
- 2 pins for remote status light (including ground)
- 2 pins for CAN communication with the ECU

© 2024 Fédération Internationale de l’Automobile

- 4 pins for external Ethernet or USB download connection, wired to a download connector, which is accessible without removing any parts
-

8.6 Data logger, sensors, dashboard and/or steering wheel display:

8.6.1 Data logger

The chassis must be equipped with a data logging system.

The ECU must be used as data logger.

It must be possible to restrict competitor access to at least the channels defined by Article 5.5.4. The channels must be stored for Power Unit support and scrutineering purposes.

8.6.2 Sensors

The chassis has to be equipped with only the following sensors:

- Wheel speeds front axle (2 sensors)

- Steering angle (1 sensor)

- Brake pressure front/rear (2 sensors)

- Lap timer/trigger (1 sensor)

- Gear (1 sensor)

- Throttle pedal

In addition at least one 2-axial (X and Y) accelerometer must be available on the data logging system.

8.6.3 Dashboard/steering wheel display

The car must be equipped with a dashboard or steering wheel display. A functional check for the sensors mentioned in Article 8.6.2 must be possible only by using the dashboard or steering wheel display.

8.7 Electrical system connection interfaces:

The purpose of the regulations under Article 8.7 below is to minimise the effort when changing the make of Power Unit.

The connection interface between Power Unit and chassis loom as defined by Appendix 2 is mandatory. The specified connector may be replaced with an appropriate equivalent.

For the sole purpose of cost saving, an alternative connection interface between Power Unit and chassis loom may be agreed between the chassis and engine manufacturer. The alternative solution must provide the same functionality.

The sensor signals, mentioned in Appendix 2, may to be substituted by CAN signals. If required by the Power Unit or chassis manufacturer, direct sensor signals have to be provided.

8.8 Throttle fail safe :

Every car must be equipped with a throttle fail safe algorithm, which, in case throttle and brake pedal are pressed at the same time, overrides the throttle and cuts the engine or closes the throttle and cuts the power to the MGU.

The function and the parameter of the fail safe algorithm must be communicated to the FIA.

© 2024 Fédération Internationale de l'Automobile

8.9 Marshalling System / FCY / VSC Interface:

The car has to be designed to fit an optional Marshalling System providing the following interfaces:

- Provisions for a connection between ECU and ADR for the Marshalling System
- Provisions for power supply and CAN communication with ECU, ADR and Marshalling System for a timing transponder
- Provisions to install antennae for GPS and radio communication
- An additional speed limiter at 80 km/h to be used during a FCY or VSC phase
- CAN communication Interface

Provisions have to be made to allow a connection of the rear light (Article 14.5) to the CAN communication interface.

The detailed requirements can be found in the Appendix to the Technical Regulations

© 2024 Fédération Internationale de l'Automobile

ARTICLE 9 : TRANSMISSION TO THE WHEELS

9.1 Gearbox homologation:

Only gearboxes which have been homologated in accordance with the Formula 4 Homologation Regulations may be used during an event.

9.2 Four wheel drive :

Four wheel drive cars are forbidden.

9.3 Type of gearbox :

9.3.1 All cars must have six forward gears.

9.3.2 No forward gear ratio pair must be :

a) Less than 12.75mm wide when measured across the gear tooth at the root diameter or any point 1mm above or below the root diameter. Above this area each side of the gear teeth may be chamfered by a maximum of 10˚. In addition, a chamfer or radius not exceeding 2.0mm may be applied to the sides and the tip of the teeth.

b) Less than 575g (excluding any integral shaft or collar). If an integral shaft or collar is to be excluded the mass of this may be shown by calculation assuming the gear to be 12.75mm wide and the shaft geometry to be the same as that where slide-on gears are used.

9.3.4 The distance between the centres of layshaft and mainshaft may be no less than 74,8 mm and no more than 79 mm.

9.3.3 Gear ratios must be made from steel.

9.3.4 The rotational axis of the layshaft must be in line with the crankshaft's rotational axis. All other rotational axes must also be parallel to the reference plane.

9.3.5 From the clutch to the rear wheels there are only two pairs of reduction gears allowed per ratio (except for the reverse gear).

9.3.6 Transversal gearboxes are forbidden.

9.3.7 Automatic gearboxes, torque biasing, differentials with limited slip and locked differentials are prohibited.

9.3.8 Forced lubrication is forbidden.

9.4 Reverse gear :

All cars must have a reverse gear which, at any time during the event, can be selected while the engine is running and used by the driver when seated normally.

9.5 Traction control :

The use of traction control is forbidden.

9.6 Driveshafts :

Driveshafts must be made from steel. They must be solid and have an outside diameter of not less than 21 mm.

The CV joint assembly must not form an integral part of the drive shaft assembly.

© 2024 Fédération Internationale de l'Automobile

9.7 Semi-automatic gear change system :

The ECU may be used as gearbox control unit. In case the ECU doesn't provide such functionality, it must be possible to add a standalone gearbox control unit without modifying or changing the chassis or gearbox loom.

Only electric or pneumatic semi-automatic shift systems are permitted.

The manufacturer responsible for the gearbox control unit must provide a mechanism that allows the scrutineers to accurately identify the software version loaded on the gearbox control unit.

9.8 Clutch disengagement:

All cars must be fitted with a means of disengaging the clutch for a minimum of fifteen minutes in the event of the car coming to rest with the Power Unit stopped.

This system must be in working order throughout the Event even if the main hydraulic, pneumatic or electrical systems on the car have failed.

The driver, when seated normally in the car with the seat belts unfastend, must be able to activate the system in less than five seconds.

The system must be designed in such a way that it can't be used to disengage or partially engage the clutch during the start procedure of a race.

© 2024 Fédération Internationale de l'Automobile

ARTICLE 10 : SUSPENSION AND STEERING

10.1 General:

The suspension must be a double triangle wishbone configuration with a pushrod.

10.1.1 Front suspension

The front suspension must consist only of two dampers including springs, two rocker arms and one anti-roll bar. Any kind of third element is forbidden.

The anti-roll bar must provide dedicated adjustment positions, only sliding adjustments are forbidden.

The rocker arms must be directly actuated by the pushrods. The dampers and the anti-roll bar must be directly actuated by the rocker arms.

The rocker arm support and the dampers must be situated on top of the survival cell.

10.1.2 Rear suspension

The rear suspension must consist only of two dampers including springs, two rocker arms and one anti-roll bar. Any kind of third element is forbidden.

The anti-roll bar must provide dedicated adjustment positions, only sliding adjustments are forbidden.

The rocker arms must be directly actuated by the pushrods. The dampers and the anti-roll bar must be directly actuated by the rocker arms.

10.2 Active suspension :

Active suspension is forbidden.

10.3 Chromium plating :

Chromium plating of any steel suspension components is forbidden.

10.4 Suspension members :

10.4.1 All suspension members must be made from an homogeneous metallic material.

10.4.2 In order to help prevent a wheel becoming separated in the event of all suspension members connecting it to the car failing, flexible tethers each with a cross sectional area greater than 110mm² must be fitted. The sole purpose of the tethers is to prevent a wheel becoming separated from the car, they should perform no other function.

The tethers and their attachments must also be designed in order to help prevent a wheel making contact with the driver's head during an accident.

Each wheel must be fitted with two tether which complies with FIA standard 8864-2013 providing a minimum energy absorption of 6kJ (FIA Technical List N°.37).

Each tether must have its own separate attachments at both ends which :

a) Are able to withstand a tensile force of 70kN in any direction within a cone of 45° (included angle) measured from the load line of the relevant suspension member.

b) On the survival cell or gearbox are separated by at least 100mm measured between the centres of the two attachment points.

c) On each wheel/upright assembly are separated by at least 90° radially with respect to the axis of the wheel and 100mm measured between the centres of the two attachment points.

© 2024 Fédération Internationale de l'Automobile

d) Are able to accommodate a tether end fitting with a minimum inside diameter of 15mm.

Furthermore, no suspension member may contain more than one tether.

Each tether must exceed 450mm in length and must utilise end fittings which result in a tether bend radius greater than 7.5mm.

10.4.3 The overall cross-sections of each member of every suspension component (with any non-structural shroud for wheel tethers included) must have an aspect ratio no greater than 3.5:1 and be symmetrical about its major axis. All suspension components may however have sections with an aspect ratio greater than 3.5:1, and be non-symmetrical, provided these are adjacent to their inner and outer attachments and form no more than 25% of the total distance between the attachments of the relevant member.

All measurements will be made perpendicular to a line drawn between the inner and outer attachments of the relevant member.

10.4.4 No major axis of a cross section of a suspension member may subtend an angle greater than 5° to the reference plane when measured parallel to the car centre plane.

The major axis of a cross section of one wishbone arm must be parallel to the other one.

10.4.5 Brackets for fixing the suspension members to the survival cell may have only one flat, plane surface in contact with the outside of the survival cell. The attachment surface on the survival cell side may be recessed only up to 1 mm.

When assessing whether the car is in compliance with Article 10.4.5, the side intrusion panel defined in Article 15.4.11 is not considered as survival cell.

10.4.6 Flexible joints of any kind are forbidden.

10.5 Suspension dampers :

10.5.1 Only conventional hydraulic, single tube dampers with one piston and maximum two-way adjustment are permitted in any position.

10.5.2 Damper fluid may be pressurised.

10.5.3 Damper characteristics may only vary as a function of damper piston speed, created only by suspension movement. Any other variation of damper characteristics, such as those which vary as a function of position, frequency or acceleration, are not permitted.

10.5.4 The use of blow-off valves, inertia valves, external electronic inputs, the storage of energy or any hydraulic connections between dampers are not permitted.

10.5.5 The use of any kind of bump stop is prohibited.

10.6 Sprung suspension :

Cars must be fitted with sprung suspension.

In order to avoid mass dampers, the suspension system must be so arranged that its response results only from changes in load applied to the wheels.

The springing medium must not consist solely of bolts located through flexible bushes or mountings.

There must be movement of the wheels to give suspension travel in excess of any flexibility in the attachments.

© 2024 Fédération Internationale de l'Automobile

10.7 Springs:

Only conventional coil springs may be used.

10.8 Suspension uprights:

Only two types of upright may be used for all four wheels. For this Article, the upright is considered to be the main housing, holding the wheel bearing. Additional brackets may be attached to the upright.

The upright must be a solid part made from machined aluminium-based alloy or casting. Sheet metal is forbidden.

10.9 Wheel bearings:

Only one bearing per wheel is allowed (a bearing with one outer races ~~but~~ / split inner races will be allowed).

10.10 Steering :

10.10.1 The steering must consist of a mechanical link between the driver and the wheels.

10.10.2 Four wheel steering is forbidden.

10.10.3 The steering wheel, steering column and steering rack assembly must be subjected to an impact test. Details of this test procedure may be found in Article 16.5.

10.10.4 No part of the steering wheel or column, nor any part fitted to them, may be closer to the driver than a plane formed by the entire rear edge (closest to the driver) of the steering wheel rim. All parts fixed to the steering wheel must be fitted in such a way as to minimise the risk of injury in the event of a driver's helmet making contact with any part of the wheel assembly.

© 2024 Fédération Internationale de l'Automobile

ARTICLE 11 : BRAKES

11.1 Separate circuits :

All cars must have a brake system which has at least two separate circuits operated by the same pedal. This system must be designed so that if leakage or failure occurs in one circuit, the pedal shall still operate the brakes on at least two wheels.

11.2 Brake discs :

Brake discs must be made from ferrous material.

Brake discs must not be drilled. Additionally, all discs must be ventilated and have minimum thickness of 18.0mm when new.

The weight of a new brake disc must not be less than 2450g. The weight of a complete new brake disc assembly must not be less than 2900g.

Only one type of brake disc for all four wheels may be used. Brake discs that are symmetrical about the car centre plane (the parts itself, when installed on the car), are considered being the same type.

11.3 Brake calipers :

All brake calipers must be made from aluminium materials with a modulus of elasticity no greater than 80Gpa.

There must be four brake caliper pistons on the front wheels.

There must be no more than four and no less than two brake caliper pistons on the rear wheels.

The weight of a brake caliper must not be less than 1200g.

A brake calliper providing a function of any kind whatsoever that moves the brake piston backwards when releasing the brake pedal is forbidden.

Only two types of caliper per car are admitted. Brake caliper that are symmetrical about the car centre plane (the parts itself, when installed on the car), are considered being the same type.

Viewed from the side, no part of the brake calliper may lie between two lines at 60 degrees to each other, starting from the front wheel centre line at 60 degrees below a horizontal plane through the front wheel centre line.

Any type of floating calliper installation is forbidden.

The brake pad abutment must be perpendicular to the brake disc surface.

11.4 Air ducts:

Air ducts for the purpose of cooling brakes or any other parts with a similar function are forbidden.

11.5 Liquid cooling:

Liquid cooling of any part of the braking system is forbidden.

11.6 Brake pressure modulation:

Anti-lock brakes and power braking are forbidden.

© 2024 Fédération Internationale de l'Automobile

Furthermore, any device or construction the purpose and or effect of which is to provide non-linear brake system pressures (other than any inherent mechanical non-linearity) is forbidden.

The force normal to the brake pad must be solely a function of the brake pressure.

11.7 Brake pads

Only one type (design and geometry) of brake pad for all four wheels may be used.

A competitor may choose at maximum between three different types (compound of the brake pad friction material) of homologated brake pads.

For one championship, the total number of brake pads may be more than three. The brake pad types will be then split into groups of three each. A competitor has to choose one group for the complete season.

The brake pads available must be defined in the Sporting Regulations of each Championship.

© 2024 Fédération Internationale de l'Automobile

ARTICLE 12 : WHEELS AND TYRES

Preamble :

The wheel attachment system should be designed such that the operation of the car is possible without using pneumatic wheel guns.

12.1 Location :

Complete wheels must be external to the bodywork in plan view, with the rear aerodynamic device removed.

12.2 Wheel material :

All wheels must be a single piece type, made from aluminium-based alloy.

12.3 Dimensions and weights :

12.3.1 Minimum/Maximum complete front wheel width: 200 mm/250 mm

Minimum/Maximum complete rear wheel width: 240 mm/290 mm

Wheel bead diameter: 330 mm (± 2.5 mm)

12.3.2 These measurements will be taken horizontally at axle height.

12.3.3 The weight of a rim must not be less than 5000 g.

12.3.4 The rim must have 12 bores for drive pegs, homogeneously distributed on a 100 mm diameter perpendicular to the rotational axis.

12.3.5 The inner diameter of the rim, which is in contact with the wheel hub, must have a diameter of 56,5 mm.

12.4 Maximum number of wheels :

The number of wheels is fixed at four.

12.5 Wheel retention:

12.5.1 A safety spring must be in place on the wheel nut throughout the event and must be replaced after each wheel change. These springs must be painted dayglo red or orange.

12.5.2 Wheel nuts may only have flat, plane or cylindrical surfaces in contact with rims.

12.6 Pressure control valves :

Pressure control valves on the wheels are forbidden.

12.7 Aerodynamic influence :

Any device, construction or part of the wheel that is designed for the purpose of guiding or influencing the airflow through the wheel, or whose purpose is anything other than transferring load from the tyre to the wheel hub, is forbidden.

© 2024 Fédération Internationale de l'Automobile

ARTICLE 13 : COCKPIT

13.1 Accommodating different driver sizes :

The cockpit and all parts of the cockpit installation such as pedals, seat and steering wheel must be designed in a way that drivers with a spread of body size from 1.50m up to 1.97m may be fitted in the car while respecting the seating position requirements.

The driver installation adjustment has to be approved by the FIA Technical Department during the homologation process. The adjustment of the pedals must be possible without using additional adapter plates or similar.

The compliance with the above mentioned requirements has to be demonstrated during the homologation process by fitting the different human CAD models (three different sizes: small, medium and large), provided by the FIA, in the car. Detailed fitting instructions can be found in the Appendix to the Technical Regulations.

In order to achieve a limitation of the seat foam inserts thickness of 50mm, different sizes of extractable seats as defined in Article 14.7 must be used to fit the human CAD models. Additional gap fillers must be used to fill the voids between the extractable seat and the survival cell created by different sizes of seats.
Those gap fillers must comply with the requirements which can be found the Appendix to the Technical Regulations.

13.2 Cockpit opening :

13.2.1 In order to ensure that the opening giving access to the cockpit is of adequate size, the template shown in Drawing 9 will be inserted into the survival cell and bodywork.

During this test the secondary roll structure, steering wheel, steering column, seat and all padding required by Articles 14.6 (including fixings), may be removed and the template must be held horizontal so its lower face is parallel to the reference plane and lowered vertically from above the car until its lower face is 535mm above the reference plane.

Referring to Drawing 9, the rear edge of the template must be between 1650mm and 1675mm behind the front wheel centre line.

13.2.2 The driver must be able to enter and get out of the cockpit without it being necessary to open a door or remove any part of the car other than the steering wheel. When seated normally, the driver must be facing forwards and the rearmost part of his crash helmet may be no more than 125mm forward of the plane C-C.

13.2.3 From his normal seating position, with all seat belts fastened and whilst wearing his usual driving equipment, the driver must be able to remove the steering wheel and get out of the car within 7 seconds and then replace the steering wheel in a total of 12 seconds.

For this test, the position of the steered wheels will be determined by the scrutineer and after the steering wheel has been replaced steering control must be maintained.

13.3 Steering wheel :

13.3.1 The steering wheel must be fitted with a quick release mechanism. Its method of release must be by pulling a concentric flange installed on the steering column behind the wheel.

13.3.2 The steering wheel must be positioned such that at any angle of rotation there is at least 50mm between any part of the steering wheel assembly rearward of the collapsible steering column element and the survival cell and bodywork, when measured parallel to the steering wheel axis.

© 2024 Fédération Internationale de l'Automobile

13.4 Internal cross section :

13.4.1 A free vertical cross section, which allows the outer template shown in Drawing 10 to be passed vertically through the cockpit to a point 100mm behind the face of the rearmost pedal when in the inoperative position, must be maintained over its entire length.

The only things which may encroach on this area are the steering wheel and any padding that is required by Article 14.6.5.

13.4.2 A free vertical cross section, which allows the inner template shown in Drawing 10 to be passed vertically through the cockpit to a point 100mm behind the face of rearmost pedal when in the inoperative position, must be maintained over its entire length.

The only thing which may encroach on this area is the steering wheel.

13.5 Position of the driver's feet :

The face of the foremost pedal, when in the inoperative position, must be situated no less than 300mm rearward of A-A and rearward of the front wheel centre line.

13.6 Clutch, brake and throttle pedal :

The clutch, brake and throttle pedal may only be operated by the driver's foot. Any device or construction that is designed to influence the clutch or brake pressure or the throttle opening by any other means is forbidden.

The only exception to the above are homologated functionalities provided by the ECU.

© 2024 Fédération Internationale de l'Automobile

ARTICLE 14 : SAFETY EQUIPMENT

14.1 Fire extinguishers:

14.1.1 All cars must be fitted with a fire extinguishing system from the FIA Technical List N°16: "Extinguisher systems homologated by the FIA" or FIA Technical List N°97: "Plumbed-In Fire Suppression Systems homologated according to FIA Standard 8876-2022".

14.1.2 The number of nozzles in the cockpit and Power Unit compartment must be the same as described in the installation manual (the manuals are listed on the FIA website).

14.1.3 Each pressure vessel must be equipped with a means of checking its pressure which may vary according to the type of extinguishant used.

The fill pressure is indicated on the FIA label.

14.1.4 All parts of the extinguishing system must be situated within the survival cell and all extinguishing equipment must withstand fire.

14.1.5 Any triggering system having its own source of energy is permitted, provided it is possible to operate all extinguishers should the main electrical circuits of the car fail.

The driver must be able to trigger the extinguishing system manually when seated normally with his safety belts fastened and the steering wheel in place.

Furthermore, a means of triggering from the outside must be combined with the circuit breaker switches described in Article 14.2.2. They must be marked with a letter "E" in red at least 80mm tall, with a line thickness of at least 8mm, inside a white circle of at least 100mm diameter with a red edge with a line thickness of at least 4mm.

14.1.6 The system must work in any position, even when the car is inverted.

14.1.7 Extinguisher nozzles must be suitable for the extinguishant and be installed in such a way that they are not directly pointed at the driver.

14.2 Master switch:

14.2.1 The driver, when seated normally with safety belt fastened and steering wheel in place, must be able to cut off all electrical circuits to the ignition, all fuel pumps and the rear light by means of a spark proof circuit breaker switch. It must also shutdown the ERS system.

This switch must be located on the dashboard and must be clearly marked by a symbol showing a red spark in a white edged blue triangle.

14.2.2 There must also be two exterior horizontal handles which are capable of being operated from a distance by a hook. These handles must be situated at the base of the principal roll structure on both sides of the car and have the same function as the switch described in Article 14.2.1.

14.3 Rear view mirrors:

14.3.1 All cars must have at least two mirrors mounted so that the driver has visibility to the rear and both sides of the car.

14.3.2 The reflective surface of each mirror must be at least 150mm wide, this being maintained over a height of at least 50mm. Additionally, each corner may have a radius no greater than 10mm.

14.3.3 No part of the mirror reflective surface may be less than 250mm from the car centre plane, less than 550mm forward or more than 750mm forward of the plane C-C.

No part of the rear view mirrors, the mirror housings or the mirror mountings may be situated more than 500mm from the car centre plane.

© 2024 Fédération Internationale de l'Automobile

14.3.4 The scrutineers must be satisfied by a practical demonstration that the driver, when seated normally, can clearly define following vehicles.

For this purpose, the driver shall be required to identify any letter or number, 150mm high and 100mm wide, placed anywhere on boards behind the car, the positions of which are detailed below :

Height	:	From 400mm to 1000mm from the ground.
Width	:	2000mm either side of the car centre plane.
Position	:	10m behind the rear axle line of the car.

14.4 Safety belts:

The wearing of two shoulder straps, one abdominal strap and two straps between the legs is mandatory. These straps must be securely fixed to the car and must comply with FIA standard 8853-2016.

Detailed calculations have to be provided, showing that the safety belt anchorage points are able to withstand 15kN in any accident direction. Detailed requirements of the calculations can be found in the Appendix to the Technical Regulations.

14.5 Rear light:

All cars must have three rear lights in working order throughout the event which:

a) Is a model approved according to FIA standard 8874-2019 and approved by the FIA for F3/F4 cars.

b) Are clearly visible from the rear.

c) Can be switched on by the driver when seated normally in the car.

The first such light must:

d) Faces rearwards at 90° to the car centre plane and the reference plane.

e) Is clearly visible from the rear.

f) Is not mounted more than 100mm from the car centre plane.

g) Is at least 280mm above the reference plane.

h) Is no less than 450mm behind the rear wheel centre line, measured to the face of the lens and parallel to the reference plane.

The measurements being taken to the centre of area of the lens.

Additionally, two further lights must be fitted, one on each side of the car. Each such light must:

- Lie in its entirety between 600mm and 800mm above the reference plane
- Lie in its entirety at least 350mm from the car centre plane
- Lie in its entirety at least 500mm behind the rear wheel centre line
- In side view, be covered completely by the rear wing endplates defined in Article 3.6.3
- Respect the directionality of the lens of the LED elements, which should point at a nominally horizontal direction towards the back

The two further lights will be ignored when assessing whether the car is in compliance with Article 3.

© 2024 Fédération Internationale de l'Automobile

All three lights should flash with a minimum 40% duty cycle at a rate of

- 10 Hz when the engine is stalled
- 4 Hz when used as a rain light
- 1 Hz when any kind of speed limiter or VSC/FCY is activated

14.6 Cockpit padding :

14.6.1 All cars must be equipped with the following areas of padding for the driver's head which :

a) Are so arranged that they can be removed from the car as one part.

b) Are located by two horizontal pegs behind the driver' head and two fixings, which are clearly indicated and easily removable without tools, at the front corners.

The horizontal pegs must be fixed to the padding, symmetrical to the car centre plane, with its centre axis at least 200mm apart. The survival cell must have recepting openings accordingly with a maximum vertical clearance of 1.0mm. The pegs must engage with the survival cell over at least 12mm, measured parallel to the car centre plane.

No tape or similar material may be used to cover the forward fixings of the headrest.

c) Are made from a material which is corresponding to the specification :
CONFOR CF45 (Blue) or CONFOR CF45M (Blue) (FIA Technical List n°17)

d) In all areas that are not in contact with the chassis, the padding must be covered with two plies of Aramid fibre/epoxy resin composite pre-preg material in plain weave, consisting of one 60gsm fabric and one 170gsm fabric, with a cured resin content of 50% (± 5%) by weight.

e) Are positioned to be the first point of contact for the driver's helmet in the event of an impact projecting the helmet towards the padding;

Are installed such that if any movement of the helmet during an accident, were to compress the foam fully at any point, the helmet would not make contact with any structural part of the car.

Furthermore, for the benefit of rescue crews the method of removal must also be clearly indicated.

No part of the padding described above may obscure sight of any part of the driver's helmet when he is seated normally and viewed from directly above the car.

Any void between each of these areas of padding must also be completely filled with the same material.

The cockpit padding must enclose the volume shown in Drawing 18.

14.6.2 The rear area of padding must be positioned behind his helmet and be between 75mm and 90mm thick over an area of at least 65000mm².

The bottom surface must be in contact with survival cell to avoid any vertical movement.

If necessary, and only for driver comfort, an additional piece of padding no greater than 10mm thick may be attached to this headrest provided it is made from the same material.

14.6.3 Whilst normally seated, two side areas of padding must be installed each side of the driver. The padding must extend from the rear area of padding up to 400mm forward of C-C.

The padding must be no less than 95mm thick, this minimum thickness being maintained to the upper edges of the survival cell and over their the entire length of the padding. The minimum thickness will be assessed perpendicular to the car centre plane but a radius no greater than 10mm may be applied along their upper inboard edges.

© 2024 Fédération Internationale de l'Automobile

If necessary, and only for driver comfort, an additional piece of padding no greater than 20mm thick may be attached to this headrest provided it is made from the same material which incorporates a low friction surface.

14.6.4 Further cockpit padding must be provided on each side of the cockpit rim from the side areas of padding up to minimum 675mm forward of C-C. The purpose of the additional padding is to provide protection to the driver's head in the event of an oblique frontal impact and must, therefore, be made from the same material as the other three areas of padding.

These extensions must:

a) Have between 375mm forward of C-C and 600mm forward C-C a minimum height of 75mm over the entire length, measured perpendicular to car centre plane.

b) Be symmetrically positioned about the car centre plane and a continuation of the side areas of padding.

c) Be positioned with their upper surfaces at least as high as the survival cell over their entire length.

d) Have a radius on their upper inboard edge no greater than 10mm.

14.6.5 In order to minimise the risk of leg injury during an accident, additional areas of padding must be fitted each side of, and above, the driver's legs.

These areas of padding must :

a) Are made from a material which is corresponding to the specification : CONFOR CF45 (Blue) or CONFOR CF45M (Blue) (FIA Technical List n°17)
b) Be covered with non-flammable and non-combustible material.
c) Be no less than 25mm thick over their entire area.
d) Cover the area situated between the plane B-B and 100mm behind the face of the rearmost pedal when in the inoperative position.
e) Cover the area above the line A-A shown in Drawing 10.

14.7 Seat, seat fixing and removal :

14.7.1 In order that an injured driver may be removed from the car in his seat following an accident, all cars must be fitted with a seat complying with the FIA Specification for Extractable Seats in Open Cockpit Cars.

14.7.2 The seat shall be firmly retained longitudinally and laterally with no more than four pins. The pins must engage the Extractable Seat in its operational position by a minimum of 10mm measured along their axis

14.7.3 The seat must be equipped with receptacles which permit the fitting of belts to secure the driver and one which will permit the fitting of a head stabilisation device. The receptacles must be easily accessible to resuce crews.

14.7.4 The seat must be removable along the direction normal to the reference plane without the need to cut or remove any of the seat belts.

A test must be carried out on the seat when fitted to a fully representative car with the driver present. Once the buckle has been released it must be possible to extract the seat from the car without any further adjustment of the harness.

14.7.5 Any seat made from foam must be covered with a non-flammable and non-combustible material. The cladding materials shall be tested for flammability in accordance with ISO standard 3795. The speed of combustion shall be less than or equal to 75 mm/min. The thickness of any foam insert is limited to maximum 50mm.
The foam thickness is measured the following:

© 2024 Fédération Internationale de l'Automobile

- Behind and underneath the driver parallel to the car centre plane
- Beside the driver normal to the car centre plane

14.7.6 To ensure compatibility with the seat gap fillers referred to in Article 13.1, the top edge of the pelvis side supports and the forward edge of the shoulder side supports (if present) must be able to deflect outward in the lateral direction by at least 30mm without creating sharp edges.

14.8 Head and neck supports :

No head and neck support worn by the driver may be less 25mm from any structural part of the car when he is seated in his normal driving position.

14.9 Towing device :

Each car must be equipped at the rear with a sturdy towing device which must be marked in fluorescent red.

© 2024 Fédération Internationale de l'Automobile

ARTICLE 15: CAR CONSTRUCTION

15.1 Materials used for car construction :

15.1.1 The use of ceramic materials is forbidden other than for brake pad friction materials. Ceramic Materials (e.g. Al_2O_3, SiC, B_4C, Ti_5Si_3, SiO_2, Si_3N_4) – These are inorganic, non metallic solids.

The use of titanium materials in safety belts complying with FIA standard 8853-2016 is allowed.

The use of titanium materials for the principal roll structure, suspension members and the front fixation of the secondary roll structure is forbidden.

The use of titanium materials in any other case has to be approved for each part separately by the FIA during the homologation process.

15.1.2 Any repairs to the survival cell or nosebox must be carried out in accordance with the manufacturer's specifications, in a repair facility approved by the manufacturer.

15.1.3 The car may not be used in another event until the technical passport has been completed satisfactorily.

15.1.4 In exception to the above, ERS materials are free.

15.2 Roll structures :

15.2.1 All cars must have two roll structures which are designed to help prevent injury to the driver in the event of the car becoming inverted.

The principal structure must be at least 935mm above the reference plane at a point 15mm behind the plane C-C and at least 950mm at a point 30mm behind the plane C-C.

The secondary roll structure, which is not considered part of the survival cell, must be positioned symmetrically about the car centre plane with its front fixing axis 1000mm forward of the plane C-C and 650mm above the reference plane. The mounting faces for the rearward fixings must lie on a plane parallel to and 685mm above the reference plane.

Referring to Drawing 11, the driver's helmet and steering wheel must be arranged such that they lie below the following two lines:

- a line drawn between the front fixing axis of the secondary roll structure and a point 75mm vertically below the highest point of the principal roll structure.

- a line, tangent to the highest point of the secondary roll structure at an angle of 4.0° to the reference plane.

15.2.2 The principal roll structure may not form an integral part of the survival cell and must be made from a homogeneous metallic material. The attachment of the principal roll structure to the survival cell may not fulfil any other function or purpose whatsoever.
The principal structure must pass two static load test details of which may be found in Article 17.2.
In addition, detailed calculations have to be provided, showing that the principal roll structure is able to withstand a 80kN lateral load, applied to its highest point . Detailed requirements of the calculations can be found in the Appendix to the Technical Regulations.

15.2.3 The secondary roll structure attachments to the survival cell must pass four static load tests details of which may be found in Article 17.2.

15.2.4 The principal roll structure must have a minimum enclosed structural cross section of 10000mm², in vertical projection, across a horizontal plane 50mm below its highest point. The area thus established must not exceed 200mm in length or width and may not be less than 10000mm² below this point.

© 2024 Fédération Internationale de l'Automobile

15.2.5 The secondary roll structure must comply with the FIA standard 8869-2018 Part 2 (Steel). Details of the structure and its mountings may be found in the Appendix to the Technical Regulations.

15.2.6 In addition to the volume allowed by Article 3.4.1, the secondary roll structure may have a fairing attached, provided it is situated on top of the survival cell within a volume defined by the following planes:
- Two planes normal to C-C, which are defined by points 15mm and 40mm from the car centre plane and 700mm and 610mm respectively above the reference plane
- Two planes parallel to C-C and 30mm and 275mm respectively forward of B-B
- A plane parallel to and 700mm above the reference plane

15.2.7 In order that a car may be lifted quickly in the event of it stopping on the circuit, the principal rollover structure must incorporate a clearly visible unobstructed opening designed to permit a strap, whose section measures 60mm x 30mm, to pass through it.

15.3 Structure behind the driver:

The parts of the survival cell or the structural support (as mentioned below) immediately behind the driver which lie less than 150mm from the car centre plane, must be situated no further forward than the line a-a1-b-c-d-e shown in Drawing 9.

The parts of the survival cell or the structural support (as mentioned below) immediately behind the driver which lie less than 150mm from the car centre plane and between 80mm and 460mm above the reference plane, may not be situated more than 20 mm rearward of the line a-a1-b-c shown in Drawing 9, the 20mm measured normal to the relevant sections of the line a-a1-b-c.

No part of the survival cell or the seat shell may be within a volume defined by a spherical object of 250mm diameter and with its centre point on the car centre plane, 595mm above the reference plane and 145mm forward of the plane C-C.

The survival cell must provide structural support for the driver’s seat in an area less than 150mm from car centre plane and between 80mm and 460mm above the reference.

The support is not required to form an integral part of the survival cell.

The survival cell must be designed such that an ES with the minimum dimensions give in Drawing 12, can be fitted inside the survival cell, on the floor behind the driver's seat. The volume for the ES must be isolated from the cockpit.

In order to validate the integrity of this structure the survival cell must pass an impact test against a solid vertical barrier placed parallel to C-C. Details of the test procedure may be found in Article 16.3.

The survival cell and structural support for the driver’s seat must pass static load test. Details of the test procedure may be found in Article 18.10.

15.4 Survival cell specifications :

15.4.1 Every survival cell must incorporate three FIA supplied transponders for identification purposes. These transponders must be a permanent part of the survival cell, be positioned in accordance with Drawing 13 and must be accessible for verification at any time.

15.4.2 The survival cell must have an opening for the driver, the minimum dimensions of which are given in Article 13.2. Any other ducts or openings in the survival cell must either :

a) Be of the minimum size, and for the sole purpose of allowing access to mechanical components.

© 2024 Fédération Internationale de l’Automobile

b) Be for the sole purpose of cooling the driver or mechanical or electrical components, the area of any such duct or opening may not exceed 3000mm^2.

c) Be for the sole purpose of routing wiring looms, cables or fluid lines, the total combined area of any such openings must not exceed 7000mm^2.

The survival cell front bulkhead, before the application of the panel defined in Article 15.4.12, may have an opening no greater than 25000mm^2.

15.4.3 Referring to Drawing 1:

The rear face of the cockpit entry template, whilst held in the position described in Article 13.2.1, defines the position of the plane C-C.

The car centre plane is the plane of symmetry of the cockpit entry template, whilst held in the position described in Article 13.2.1, perpendicular to the reference plane and to C-C.

The plane B-B is parallel to and lies 875mm forward of C-C.

The plane A-A is parallel to and lies 1950mm forward of C-C.
The Frontal Anti-Intrusion Panel as defined in Article 15.4.12 must be on or forward of the plane A-A.

The external width of the survival cell between the planes B-B and C-C must be no less than 480mm and must be at least 75mm per side wider than the cockpit opening when measured normal to the inside of the cockpit aperture. These minimum dimensions must be maintained over a continuous height of at least 350mm.

Between the planes A-A and B-B, any external cross-section of the survival cell by a plane parallel to C-C must contain a rectangle with radii applied on its bottom corners and chamfers applied on its top corners, positioned symmetrically about the car centre plane, of the following dimensions:

a) width defined by a linear interpolation from 480mm at the plane B-B to 350mm at the plane A-A

b) height defined by a continuous (non-linear) decrease from 400mm at the plane B-B to 300mm at the plane A-A

c) bottom corner and top chamfer by a linear interpolation between the two cross sections at plane B-B and plane A-A as defined in Drawing 1:

No part of the survival cell may lie above two planes, normal to the car centre plane, defined by the following points :

a) one point on A-A and 500mm above the reference plane and one point 300mm behind A-A and 600mm above the reference plane.

b) one point 300mm behind A-A and 600mm above the reference plane and one point on B-B and 610mm above the reference plane.

15.4.4 Referring to Drawing 14

The survival cell must contain the following planes :

- One plane normal to the car centre plane, 150 mm wide, defined by a point on A-A and 180mm above the reference plane and another one point 50mm forward of B-B and 150mm above the reference plane

- One plane normal to the car centre plane defined by a point 50mm forward of B-B and 105mm above the reference plane and another point 810mm forward of C-C and 15mm above the reference plane. The width is defined by a linear taper from 150mm at 50mm forward of B-B and 250mm at 810mm forward of C-C

© 2024 Fédération Internationale de l'Automobile

- One plane parallel to and 15mm above the reference plane, 250mm wide and from 660mm to 810mm forward of C-C.

15.4.5 Referring to Drawing 15, the survival cell must provide a minimum free pedal volume from the front wheel centre line to 400mm behind the front wheel centre line.

Referring to Drawing 16, the survival cell must provide a minimum free knee volume from 160mm forward of B-B to B-B.

No part of the survival cell may encroach in the volumes, which are defined by a linear extrusion of the above defined sections parallel to the car centre plane and at an angle of maximum +/-10° to the reference plane.

15.4.6 When the test referred to in Article 13.2.1 is carried out and the template is in position with its lower face parallel to and 535mm above the reference plane, the shape of the survival cell must be such that no part of it is visible when viewed from either side of the car. The parts of the survival cell which are situated each side of the driver's head must be no more than 550mm apart.

In order to ensure that the driver's head is not unduly exposed and for him to maintain good lateral visibility he must, when seated normally and looking straight ahead with his head as far back as possible, have his eye visible when viewed from the side. The centre of gravity of his head must lie below the top of the survival cell at this position. When viewed from the side of the car, the centre of gravity of the driver's head will be deemed to be the intersection of a vertical line passing through the centre of his ear and a horizontal line passing through the centre of his eye.

15.4.7 Behind the driver, the survival cell must contain a plane, which is :

a) parallel to and 790mm above the reference plane,

b) 180mm wide and symmetrical to the car centre plane,

c) and extends from the highest point of the principal roll structure 150 mm rearwards along the car centre plane.

Outside the prescribed plane, the height may decrease at a linear rate with a maximum angle of 70° measured parallel to the reference plane and normal to the car centre plane and must join the horizontal line with a radius of at least 20mm.

Behind C-C until the rear end of the survival cell, each cross section of the survival cell taken normal to the car centre plane must be symmetrical about the car centre plane on its external shape.

The minimum height of the survival cell from C-C to a point 100mm behind C-C is 685mm above the reference plane and must be maintained over a width of at least 520mm. Behind the point 100mm behind C-C the minimum height may decrease at a linear rate to 655mm at the end of survival, maintained over a width of at least 520mm.

Exception to this might be made for any opening in this area accessing the fuel tank and /or refuelling connectors.

15.4.8 All Power Unit fixation points on the survival cell as shown in Drawing 8 must lie in one plane which is normal to the reference plane and normal to the car centre plane. A tolerance of 2 mm in X-direction (along the car centre plane) is permitted for manufacturing tolerances and the use of steel bushes.

15.4.9 In order to give additional protection to the driver in the event of a side impact a flat test panel of uniform construction, which is designed and constructed in order to represent a section of the survival cell sides, must pass a strength test. Details of the test procedure may be found in Article 18.7.

Referring to Drawing 1, with the exception of local reinforcement and/or inserts, all parts of the survival cell which are as wide or wider than the minimum widths stipulated in Article 15.4.3, including any radii applied and considering the area definition below in this Article,

© 2024 Fédération Internationale de l'Automobile

must be manufactured to the same specification as a single panel which satisfies the requirements of Article 18.7. However, additional plies may be used and core thickness may be increased where applicable, and local relief applied, provided the FIA technical delegate is satisfied in each case that the overall strength of the structure has been improved by doing so.

Furthermore, parts to this tested specification must cover the parts of the survival cell that lie in an area which :

a) Begins no less than 250mm high at the plane A-A tapering at a linear rate to a minimum of 450mm high at the plane B-B.

b) Lies between two horizontal lines 100mm and 550mm above the reference plane between the plane B-B and the rear of the survival cell.

Any cut-outs in this defined area forward of a line 300mm rearward of A-A must total less than 15000mm² per side.

15.4.10 Once the requirements of Articles 15.4.3, 15.4.4 and 15.4.9 have been met, two panels must then be permanently attached to each side of the survival cell with an FIA-approved manufacturing method.

The panels must comply with the precise lay-up instructions which could be found in the Appendix to the Technical Regulations or a representative panel of the same specification must pass a strength test. Details of the test procedure may be found in the Appendix to the Technical Regulations.

These panels must, in side view, cover the area defined by the following lines:

a) two horizontal lines, 100mm and 500mm above the reference plane

b) a vertical line on B-B

c) a line through a point on B-B and 190mm above the reference plane and a point 650mm forward of C-C and 100mm above the reference plane

d) two lines parallel to and 50mm (measured normal to the lines) behind the lines a-b and b-c (referring to Drawing 9).

In any case these panels have to extend 50mm rewards of the line formed by the parts of the survival cell immediately behind the driver which separate the cockpit from the car's fuel tank (measured normal to the line).

A 50mm linear taper may be included at the forward and rearward boundaries of the panel.

Cut-outs in these panels totalling 15000mm² per side will be permitted for fitting around side impact structures, the survival cell openings described in Article 15.4.2c) and essential fixings.

15.4.11 Once the requirements of Articles 15.4.3, 15.4.4, 15.4.9 and 15.4.10 have been met one further panel, which may be made in a maximum of three parts must then be permanently attached to the survival cell with an FIA-approved manufacturing method.
In case an FIA-approved adhesive is used, it has to applied over its entire surface including all overlapping joints.

The panel must comply with the precise lay-up instructions which could be found in the Appendix to the Technical Regulations or a representative panel of the same specification must pass a strength test. Details of the test procedure may be found in the Appendix to the Technical Regulations.
This panel must, in side view, cover the area of the outer skin of the survival cell lying between the following lines:

a) two horizontal lines, 60mm and 500mm above the reference plane

b) two vertical lines on A-A and 650mm forward of C-C

© 2024 Fédération Internationale de l'Automobile

c) a line through a point on B-B and 500mm above the reference plane and a point on A-A and 420mm above the reference plane

This will not apply for the areas fitted with the panels defined by Article 15.4.10 and Article 15.4.12.

A 25mm horizontal linear taper may be included at the forward and rearward boundaries of the panel.
This panel must overlap the panel defined by Article 15.4.10 along all joining edges by a minimum of 25mm. If made in more than one part, all adjacent panels must overlap by a minimum of 25mm. All overlaps may include linear tapers or steps in the thickness of both overlapping parts.
Cut-outs in this panel totalling 15000mm² per side will be permitted for fitting around the survival cell openings described in Article 15.4.2c) and essential fixings.

15.4.12 A Frontal Anti-Intrusion Panel must be rigidly attached to front face of the survival cell.

The panel must cover the entire surface of the survival cell front bulkhead. Cut-outs in this panel totalling 3000mm² will be permitted.

The panel must be made from a homogeneous metallic material.

The panel must pass a strength test. Details of the test procedure may be found in Article 18.9.

15.4.13 An alternative survival cell sidewall construction and layup may be homologated. In replacement of Article 15.4.9, 15.4.10, 15.4.11, the surivial cell has to comply to the requirements, detailed in the Appendix to the Technical Regulations.

15.5 Survival cell safety requirements :

15.5.1 The frontal impact absorbing structure must pass an impact test against a solid vertical barrier placed parallel to C-C. Details of the test procedure may be found in Article 16.2.

15.5.2 An impact absorbing structure must be fitted behind the gearbox symmetrically about the car centre plane with its rearmost point between 680mm and 830mm behind the rear wheel centre line.

The rearmost face of the impact structure must be a rectangular section no less than 100mm wide, this minimum width must be maintained over a height of at least 130mm and each corner may incorporate a radius no greater than 10mm.

The rearmost face of the impact structure may be no more than 360mm and no less than 170mm above the reference plane.

Except for fixation, the external cross section, in horizontal projection, forward of the rearmost face of the impact structure may not diminish.

The structure which was subjected to the test described in Article 18.8 must pass an impact test and be constructed from materials which will not be substantially affected by the temperatures it is likely to be subjected to during use. Details of this test procedure may be found in Article 16.4.

In order to help prevent the rear impact absorbing structure or a part of it becoming separated, a flexible tether must be fitted. The sole purpose of this tethers is to prevent the rear impact absorbing structure or a part of it becoming separated from the car, it should perform no other function.

One tether which complies with FIA standard 8864-2013 providing a minimum energy absorption of 2kJ (FIA Technical List N°.37) must be fitted.

Each tether must have its own separate attachments at both ends which :

© 2024 Fédération Internationale de l'Automobile

a) Are able to withstand a tensile force of 20kN in any direction within a cone of 45° (included angle) measured from the load line. Should the tether generate a higher load before reaching an energy absorption of 2kJ, the acceptable load of the attachment must be increased accordingly.

b) Could be shared on gearbox side with the wheel tether attachment required by Article 10.4

c) Are lying on either side of the expected point of failure. The chassis manufacturer must demonstrate by calculation and / or a physical test that the attachment points are different sides of the expected point of failure when applying a lateral load to the most rearward point of the rear impact absorbing structure.

d) Are able to accommodate a tether end fitting with a minimum inside diameter of 15mm.

The tether must utilise end fittings which result in a tether bend radius greater than 7.5mm.

15.5.3 The survival cell must also be subjected to four separate static load tests :

1) Survival cell side strength test.

2) Cockpit rim test.

3) Cockpit floor test.

4) Fuel tank floor test.

Details of the test procedures may be found in Article 18.2, 18.3, 18.4 and 18.5.

15.5.4 To test the attachments of the frontal and rear impact absorbing structures static side load tests must be carried out. Details of these test procedures may be found in Articles 18.6 and 18.8.

15.5.5 An impact absorbing structure must be fitted in front of the survival cell. This structure need not to be an integral part of the survival cell but must be solidly attached to it and be arranged symmetrically about the car centre plane.

No part of this structure may lie more than 580mm above the reference plane and its forward-most point must not be less than 1150mm forward of the front wheel centre line.

The plane D-D is defined as a plane parallel to the plane C-C and 50mm rearward of the forward-most point of this impact absorbing structure.

The plane E-E is defined as a plane parallel to the plane C-C and 150mm rearward of the forward-most point of this impact absorbing structure.

This structure must have :

a) A single external vertical cross-section which area exceeds 9000mm² at the plane D-D. No part of this cross-section may lie less than 130mm above the reference plane and its overall width must not exceed 155mm.

b) A single external vertical cross-section which area exceeds 20000mm² at the plane E-E. The overall width of this cross-section must not exceed 330mm.

When measuring these sections, only parts between the highest point of the section and 100mm vertically below this point, may be considered.

Each external vertical cross-section, taken on planes parallel to the plane C-C between the plane E-E and the plane A-A, must be a single section with an area which exceeds a value given by a linear taper from 20000mm² to 105000mm² respectively. The only exception that may be made is for its attachment to the survival cell.

The first 150 mm behind its forwardmost point must be exchangeable and/or repairable without exchanging the complete impact-absorbing structure.

© 2024 Fédération Internationale de l'Automobile

15.5.6 In order that every frontal and rear impact absorbing structure is readily identifiable by scrutineers, each one produced must incorporate one permanently embedded FIA approved transponders which are accessible for verification at any time.

15.5.7 A calculation has to be provided, showing that the maximum acceptable load of inserts for front suspension pickup points behind the front wheel centre line is significantly higher than the maximum load of the corresponding suspension members.

© 2024 Fédération Internationale de l'Automobile

ARTICLE 16 : IMPACT TESTING

16.1 Conditions applicable to all impact tests :

16.1.1 All tests must be carried out in accordance with FIA Test Procedure 01/00, in the presence of an FIA technical delegate and by using measuring equipment which has been calibrated to the satisfaction of the FIA technical delegate. A copy of the test procedure may be found in the Appendix to the Technical Regulations.

16.1.2 Any significant modification introduced into any of the structures tested shall require that part to pass a further test.

16.1.3 The test defined in the Article 16.3 must be carried out on the survival cell which has been subjected to the tests described in Articles 17.2, 17.3, 18.2, 18.3, 18.4, 18.5 and 18.10.

16.2 Frontal test 1:

To simulate in-car conditions, all parts which could materially affect the outcome of the test (including the Frontal Anti-Intrusion panel as defined in Article 15.4.12) must be fitted to the test structure which must be solidly fixed to the trolley through the mounting points of the nose structure, but not in such a way as to increase its impact resistance.

If the test facility includes a system to manage excess residual energy (in the event that the nose structure fails to absorb all the test energy), such a system must not in any way modify the results during a successful test.

For the purposes of this test, the total weight of the trolley and test structure shall be 700kg (+1%/-0) and the velocity of impact 15 metres/second.

The resistance of the test structure must be such that during the impact :

a) The maximum deceleration over the first 100mm of deformation does not exceed 12g.

b) The average deceleration over the first 100mm of deformation exceeds 3g.

c) The peak deceleration over the first 52 kJ energy absorption does not exceed 25g.

d) The peak deceleration of the trolley does not exceed 40g.

Furthermore, there must be no damage to the mountings of the nose.

This test must be carried out on a frontal impact absorbing structure which was subjected to the test described in Article 18.6.

16.3 Frontal test 2:

A 50mm (+/-1mm) thick aluminium plate should be attached to the front bulkhead of the survival cell through the mounting points of the frontal impact absorbing structure without the Frontal Anti-Intrusion Panel as defined in Article 15.4.12.

The plate should :

a) Measure 500mm (+/-1mm) wide x 375mm (+/-1mm) high.

b) Be fitted symmetrically about the car centre plane.

c) Be fitted in a vertical sense in order to ensure force distribution is similar to that with the nose fitted.

d) Have six M10 x 30mm holes in the outer face arranged in a 125mm square grid pattern, two squares wide and one square high, about its geometric centre. The test laboratory will then fit a 5mm thick 500mm x 275mm steel plate to these holes using a 5mm washer stack.

© 2024 Fédération Internationale de l'Automobile

All parts which could materially affect the outcome of the test must be fitted to the test structure which must be solidly fixed to the trolley through its Power Unit mounting points but not in such a way as to increase its impact resistance.

The survival cell may be restrained vertically by a cradle that is in contact from above and beneath the survival cell. This cradle may extend from the plane B-B maximum 250mm forward of the plane B-B.

The fuel tank must be fitted and must be full of water.

A dummy weighing at least 75kg must be fitted with safety belts described in Article 14.4 fastened. However, with the safety belts unfastened, the dummy must be able to move forwards freely in the cockpit. The dummy shall be equipped with a helmet to FIA8860 or FIA8859 and an FHR to FIA8858 (the weight of the helmet and FHR should be recorded, but should not be included in the 75kg). The safety belts shall be fastened to represent in-race conditions.

The dummy shall be fitted in the extractable seat (medium size as defined in Article 13.1) as required by Article 14.7, including the corresponding gap filler (as defined in Article 13.1) and the headrest (as defined in Article 14.6).

The fire extinguishers, as described in Article 14.1 must also be fitted.

A dummy ES of minimum 10.0kg must be fitted in the position required by Article 15.3.

For the purposes of this test, the velocity of impact shall not less than 15 metres/second.

The impact wall must be fitted with crush tubes which develop a combined nominal load of 300kN and a nominal deceleration of 40g. The detailed specification of the test including the crash test tube configuration and the weight of the trolley may be found in the Appendix to the Technical Regulations.

The resistance of the test structure must be such that following the impact there is no damage to the survival cell, to the mountings of the safety belts, fire extinguishers or ES or the extractable seat.

The maximum deceleration in the chest of the dummy for a cumulative 3ms shall be reported, this being the resultant of data from the three orthogonal axes.

Specifications of the crush tubes and test arrangement may be found in the Appendix to the Technical Regulations.

16.4 Rear test :

All parts which will be fitted behind the rear face of the Power Unit and which could materially affect the outcome of the test must be fitted to the test structure. If suspension members are to be mounted on the structure they must be fitted for the test. The structure and the gearbox must be solidly fixed to the ground and a solid object, having a mass of 700kg (+1%/-0) and travelling at a velocity of not less than 11 metres/second, will be projected into it.

The object used for this test must be flat, measure 450mm (+/-3mm) wide by 550mm (+/-3mm) high and may have a 10mm radius on all edges. Its lower edge must be at the same level as the car reference plane (+/-3mm) and must be so arranged to strike the structure vertically and parallel to the plane C-C.

During the test, the striking object may not pivot in any axis and the crash structure may be supported in any way provided this does not increase the impact resistance of the parts being tested.

The resistance of the test structure must be such that during the impact :

a) The peak deceleration over the first 225mm of deformation does not exceed 23g.

© 2024 Fédération Internationale de l'Automobile

b) The maximum deceleration does not exceed 23g for more than a cumulative 15ms, this being measured only in the direction of impact.

Furthermore, all structural damage must be contained within the rear impact absorbing structure.

This test must be carried out on the rear impact absorbing structure which was subjected to the test described in Article 18.8.

16.5 Steering column test :

The parts referred to in Article 10.10.3 must be fitted to a representative test structure; any other parts which could materially affect the outcome of the test must also be fitted. The test structure must be solidly fixed to the ground and a solid object, having a mass of 8kg (+1%/-0) and travelling at a velocity of 7m/s, will be projected into it.

The object used for this test must be hemispherical with a diameter of 165mm (+/-1mm).

For the test, the centre of the hemisphere must strike the structure at the centre of the steering wheel along the same axis as the main part of the steering column.

During the test the striking object may not pivot in any axis and the test structure may be supported in any way provided this does not increase the impact resistance of the parts being tested.

The resistance of the test structure must be such that during the impact the peak deceleration of the object does not exceed 80g for more than 3ms, this being measured only in the direction of impact. In addition, the displacement of the steering wheel assembly during the impact must be less than 50.0mm.

After the test, all substantial deformation must be within the steering column and the steering wheel quick release mechanism must still function normally.

© 2024 Fédération Internationale de l'Automobile

ARTICLE 17 : ROLL STRUCTURE TESTING

17.1 Conditions applicable to both roll structure tests :

17.1.1 All tests must be carried out in the presence of an FIA technical delegate and by using measuring equipment which has been calibrated to the satisfaction of the FIA technical delegate.

17.1.2 Any significant modification introduced into the structure or its fixation tested shall require that part to pass a further test.

17.1.3 Rubber 3mm thick may be used between the load pads and the roll structure.

17.2 Principal roll structure test :

17.2.1 The peak load must be applied in less than three minutes and be maintained for 10 seconds.

17.2.2 Under the load, deformation must be less than 50mm when measured along the loading axis and any structural failure limited to 100mm below the top of the roll structure when measured vertically.

17.2.3 The principal roll structure shall be subjected to two static load tests.

A load equivalent to 50kN laterally, 60kN longitudinally in a rearward direction and 90kN vertically, must be applied to the top of the structure through a rigid flat pad which is 200mm in diameter and perpendicular to the loading axis.

17.2.4 A second static load test must be carried out on the same survival cell and roll structure with the same load when the longitudinal component is applied in a forward direction.

17.2.5 During the test, the roll structure must be attached to the survival cell which is supported on its underside on a flat plate, fixed to it through its Power Unit mounting points and wedged laterally, but not in a way as to increase the resistance of the structure being tested.

17.3 Secondary roll structure test :

17.3.1 One secondary roll structure complying with the FIA standard 8869-2018 Part 2 (Steel) must be used for the purpose of the following tests.

17.3.2 The loads may be applied using a 150mm diameter pad or through a spherical joint whose centre lies in the specified loading position.

Rubber 3mm thick may be used between the load pads and the roll structure.

17.3.3 For each test, peak loads must be applied in less than three minutes and be maintained for five seconds.

17.3.4 After five seconds of application there must be no failure of any part of the survival cell or of any attachment between the structure and the survival cell.

17.3.5 A load equivalent to 116kN vertically downward and 46kN longitudinally rearward must be applied at a position 810mm forward of the plane C-C and 820mm above the reference plane and positioned on the car centre plane.

During the test, the structure must be attached to the survival cell which is supported on its underside on a flat plate, fixed to it through its Power Unit mounting points and, optionally, through the front bulkhead.

17.3.6 A load equivalent to 93kN laterally inward and 83kN longitudinally rearward must be applied at a position 615mm forward of the plane C-C and 800mm above the reference plane to the outer surface of the structure.

During the test, the survival cell should be fixed at its rear bulkhead via its Power Unit mounts to a strongwall and supported along its lower face by a surface plate.

© 2024 Fédération Internationale de l'Automobile

The survival cell may be restrained laterally and vertically at its front end by a cradle that wraps around all four sides of the survival cell. This cradle may extend as far forward as the plane A-A, but may not extend further rearwards than 600mm rearwards of the plane A-A.

The side of the survival cell that is opposite to the application point of the Halo test load may be restrained laterally by supports that conform to the sides of the survival cell. These lateral supports may extend no further forward than 200mm forward of the plane B-B, and no higher than 525mm above the reference plane.

17.3.7 A load of 150kN vertically upward must be applied simultaneously on the two forward fasteners of the rear attachment on the side which was determined by the FIA technical delegate.

The load must be applied through fasteners identical to the ones used for the secondary roll structure. A dummy rear attachment may be used.

Alternatively a load of 75 kN may be applied separately on each of the two forward fasteners.

During the test, the survival cell should be fixed at its rear bulkhead via its engine mounts to a strongwall and supported along its lower face by a surface plate.

The survival cell may be restrained laterally and vertically at its front end by a cradle that wraps around all four sides of the survival cell. This cradle may extend as far forward as the plane A-A, but may not extend further rearwards than 600mm rearwards of the plane A-A.

17.3.8 A load equivalent to 88kN vertically upward and 88kN longitudinally rearward must be applied on the axis of the front attachment.

The load must be applied through structure and fasteners identical to the ones used for the secondary roll structure.

During the test, the survival cell may be supported in any way provided this does not increase the strength of the attachments being tested.

During the test, the survival cell should be fixed at its rear bulkhead via its engine mounts to a strongwall and supported along its lower face by a surface plate.

The survival cell may be restrained laterally and vertically at its front end by a cradle that wraps around all four sides of the survival cell. This cradle may extend as far forward as the plane A-A, but may not extend further rearwards than 600mm rearwards of the plane A-A.

© 2024 Fédération Internationale de l'Automobile

ARTICLE 18 : STATIC LOAD TESTING

18.1 Conditions applicable to all static load tests :

18.1.1 The FIA may require the manufacturer to carry out the tests described in Articles 18.2, 18.3, 18.4, 18.5 and 18.10 on random or a percentage of produced survival cells intended for use. During these tests (on deflections greater than 3.0mm), the deflection across the inner surfaces must not exceed 120% of the deflection obtained on the survival cell used for the tests described in Articles 17.2 and 17.3.

18.1.2 Deflections and deformations will be measured at the centre of area of circular load pads and at the top of rectangular pads.

18.1.3 All peak loads must be applied in less than three minutes, through a ball jointed junction at the centre of area of the pad, and maintained for 30 seconds.

18.1.4 Following the tests described in 18.3, 18.4 and 18.5, permanent deformation must be less than 1.0mm (0.5mm in 18.3 and 18.4) after the load has been released for 1 minute.

18.1.5 All tests must be carried out by using measuring equipment which has been calibrated to the satisfaction of the FIA technical delegate.

18.1.6 A radius of 3mm is permissible on the edges of all load pads and rubber 3mm thick may be placed between them and the test structure.

18.1.7 In order to ensure all survival cells are manufactured in the same way, each constructor must submit the weight of every survival cell produced. These weights will be compared with that of the survival cell which was subjected to the tests in Articles 16.3, 17.2 and 17.3. If the weight differs by more than 5% from the one previously tested, the FIA reserves the right to carry out further frontal impact tests and roll structure tests.

18.1.8 Any significant modification introduced into any of the structures tested shall require that part to pass a further test.

18.1.9 All static and dynamic load tests must be performed with the secondary roll structure (whether dummy or otherwise) removed.

18.1.10 All static and dynamic load tests other than those mentioned in Article 18.6 and 18.10 must be performed with the Frontal Anti Intrusion Panel removed.

18.2 Survival cell side strength tests :

With reference to Drawing 17, for the survival side strength tests, described in Article 15.5.3, a pad of 300mm diameter must be placed against the side of the survival cell. The centre of the pad must be 250mm +/- 100mm behind plane B-B and 350mm +/-100mm above the reference plane. The exact position of the pad will be defined by the FIA Technical Delegate prior the homologation test.

The pad must conform to the shape of the survival cell.

During the test, the survival cell should be fixed at its rear bulkhead via its engine mounts to a strongwall and supported along its lower face by a surface plate.

The survival cell may be restrained laterally and vertically at its front end by a cradle that wraps around all four sides of the survival cell. This cradle may extend as far forward as the plane A-A, but may not extend further rearwards than 600mm rearwards of the plane A-A.

The side of the survival cell that is opposite to the application point of the Halo test load may be restrained laterally by supports that conform to the sides of the survival cell. These lateral supports may extend no further forward than 200mm forward of the plane B-B, and no higher than 525mm above the reference plane.

The load of 200 kN shall be applied, in less than 3 minutes and maintained for a minimum of 5 seconds.

© 2024 Fédération Internationale de l'Automobile

Under the load, there must be no structural failure of the inner or outer surfaces of the survival cell and the total deflection must not exceed 25mm.

18.3 Fuel tank floor test :

A pad of 200mm diameter must be placed in the centre of area of the fuel tank and a vertical upwards load of 12.5kN applied.

Under the load, there must be no structural failure of the inner or outer surfaces of the survival cell.

18.4 Cockpit floor test :

A pad of 200mm diameter must be placed beneath the survival cell, on the car centre plane and with its centre 750mm forward of the plane C-C, and a vertical upwards load of 40kN applied.

18.5 Cockpit rim test :

Two pads, each of which is 50mm in diameter, must be placed on both sides of the cockpit rim with their upper edges at the same height as the top of the cockpit side with their centres at a point 250mm forward of the plane C-C.

A constant transverse horizontal load of 30kN will then be applied at 90° to the car centre plane and under the load, there must be no structural failure of the inner or outer surfaces of the survival cell.

18.6 Nose push off test :

During the test the survival cell must be resting on a flat plate and secured to it solidly but not in a way that could increase the strength of the attachments being tested.

A constant transversal horizontal load of 40.0kN must be applied to one side of the impact absorbing structure, using a pad 100mm long and 300mm high, which conforms to the shape of the nose, at a point 550mm from the front wheel centre line.

The centre of area of the pad must pass through the plane mentioned above and the mid point of the height of the structure at the relevant section.

After 30 seconds of application, there must be no failure of the structure or of any attachment between the structure and the survival cell.

18.7 Side intrusion test :

18.7.1 The test must be carried out in accordance with FIA Test Procedure 01/21, in the presence of an FIA technical delegate and by using measuring equipment which has been calibrated to the satisfaction of the FIA technical delegate. A copy of the test procedure may be found in the Appendix to the Technical Regulations.

18.7.2 The test panel must be 500mm x 500mm and will be tested by forcing a rigid truncated cone through the centre of the panel at a rate of 2mm (+/-1mm) per second until the displacement exceeds 150mm.

During the first 100mm of displacement the load must exceed 250kN and the energy absorption must exceed 6000J. There must be no systematic damage to the border or damage to the fixture before these requirements have been met.

© 2024 Fédération Internationale de l'Automobile

18.8 Rear impact structure push off test :

During the test the gearbox and the structure must be solidly fixed to the ground but not in a way that could increase the strength of the attachments being tested.

A constant transversal horizontal load of 40.0kN must then be applied to one side of the impact absorbing structure, using a pad 100mm long and 300mm high**,** which conforms to the shape of the rear impact structure, at a point 470mm behind the rear wheel centre line.

The centre of the pad area must pass through the plane mentioned above and the mid point of the height of the structure at the relevant section. After 30 seconds of application, there must be no failure of the structure or of any attachment between the structure and the gearbox.

18.9 Frontal anti-intrusion panel test :

18.9.1 The test must be carried out in accordance with FIA Test Procedure, in the presence of an FIA technical delegate and by using measuring equipment which has been calibrated to the satisfaction of the FIA technical delegate.

The frontal anti-intrusion panel must be mounted on a frame as defined in the FIA Test Procedure.

A copy of the test procedure may be found in the Appendix to the Technical Regulations.

18.9.2 The frontal anti-intrusion panel will be tested by forcing a rigid rectangular impactor, 100mm wide and 130mm high, through the centre of the panel until a load of minimum 300kN is reached.

The load of 300 kN shall be applied, in less than 3 minutes and maintained for a minimum of 10 seconds.

During the test, the deflection under load must be less than 50.0 mm, the measurements being taken at the centre of area of the impactor.

18.10 Seat bulkhead test :

The test must be carried out in accordance with FIA Test Procedure, in the presence of an FIA technical delegate and by using measuring equipment which has been calibrated to the satisfaction of the FIA technical delegate.

A copy of the test procedure may be found in the Appendix to the Technical Regulations.

© 2024 Fédération Internationale de l'Automobile

ARTICLE 19 : FUEL

19.1 Fuel :

The fuel must comply with ISC Appendix J Article 252.9.1.

19.2 Air :

Only air may be mixed with the fuel as an oxidant.

ARTICLE 20 : FINAL TEXT

The final text for these regulations shall be the English version which will be used should any dispute arise over their interpretation.

Headings and typeface in this document are for ease of reference only and do not form part of these Technical Regulations.

© 2024 Fédération Internationale de l'Automobile

APPENDIX 1

DRAWINGS

© 2024 Fédération Internationale de l'Automobile

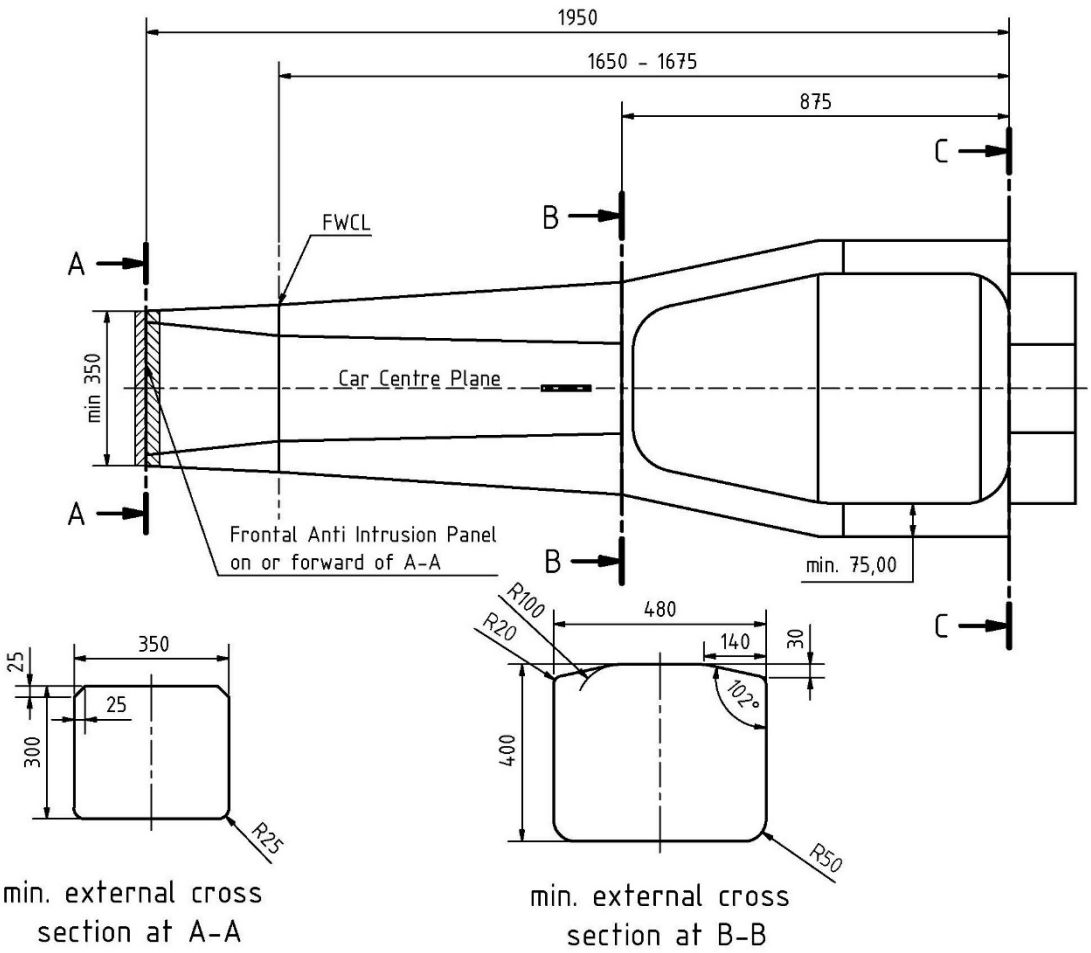

Drawing 1

© 2024 Fédération Internationale de l'Automobile

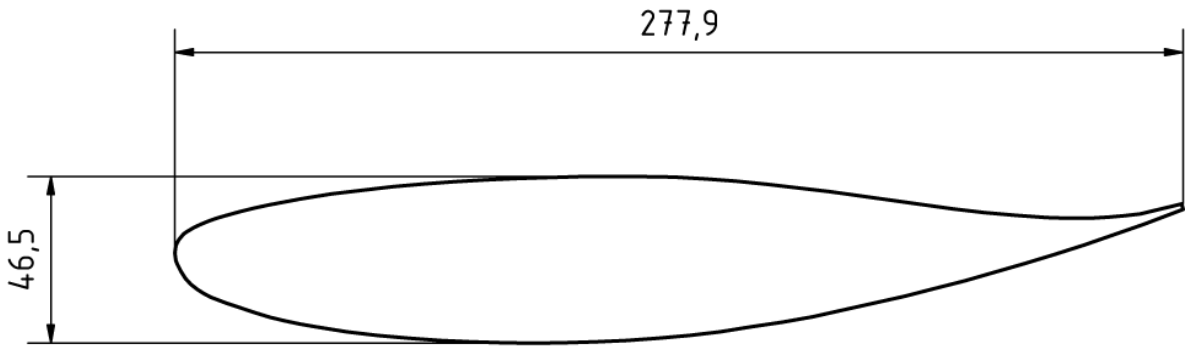

Drawing 2

Points for aerofoil section front wing, all dimensions are in millimetres (see Drawing 2):

1	00.00	00.00	**14**	-151.58	07.65	**27**	-263.58	-27.64	**40**	-112.41	-33.36
2	-11.40	-02.79	**15**	-163.33	07.59	**28**	-252.44	-31.35	**41**	-100.87	-31.19
3	-23.08	-03.94	**16**	-175.07	07.36	**29**	-241.00	-33.96	**42**	-89.38	-28.77
4	-34.82	-03.88	**17**	-186.80	06.95	**30**	-229.40	-35.82	**43**	-77.95	-26.11
5	-46.54	-03.20	**18**	-198.53	06.31	**31**	-217.73	-37.06	**44**	-66.56	-23.24
6	-58.22	-02.03	**19**	-210.24	05.41	**32**	-206.02	-37.97	**45**	-55.22	-20.18
7	-69.86	-00.49	**20**	-221.92	04.28	**33**	-194.29	-38.58	**46**	-43.94	-16.93
8	-81.48	01.20	**21**	-233.58	02.86	**34**	-182.55	-38.85	**47**	-32.72	-13.46
9	-93.11	02.85	**22**	-245.17	00.96	**35**	-170.81	-38.78	**48**	-21.59	-09.71
10	-104.76	04.36	**23**	-256.66	-01.45	**36**	-159.07	-38.43	**49**	-10.54	-05.75
11	-116.43	05.67	**24**	-267.93	-04.72	**37**	-147.35	-37.77	**50**	00.43	-01.54
12	-128.12	06.72	**25**	-277.16	-11.42	**38**	-135.66	-36.71			
13	-139.84	07.40	**26**	-273.74	-21.83	**39**	-124.01	-35.22			

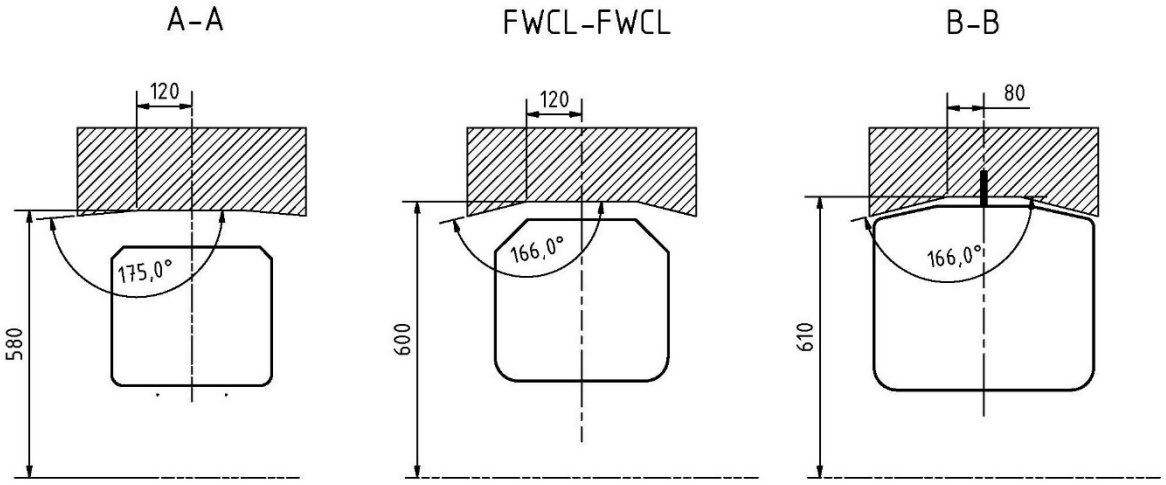

Drawing 3

© 2024 Fédération Internationale de l'Automobile

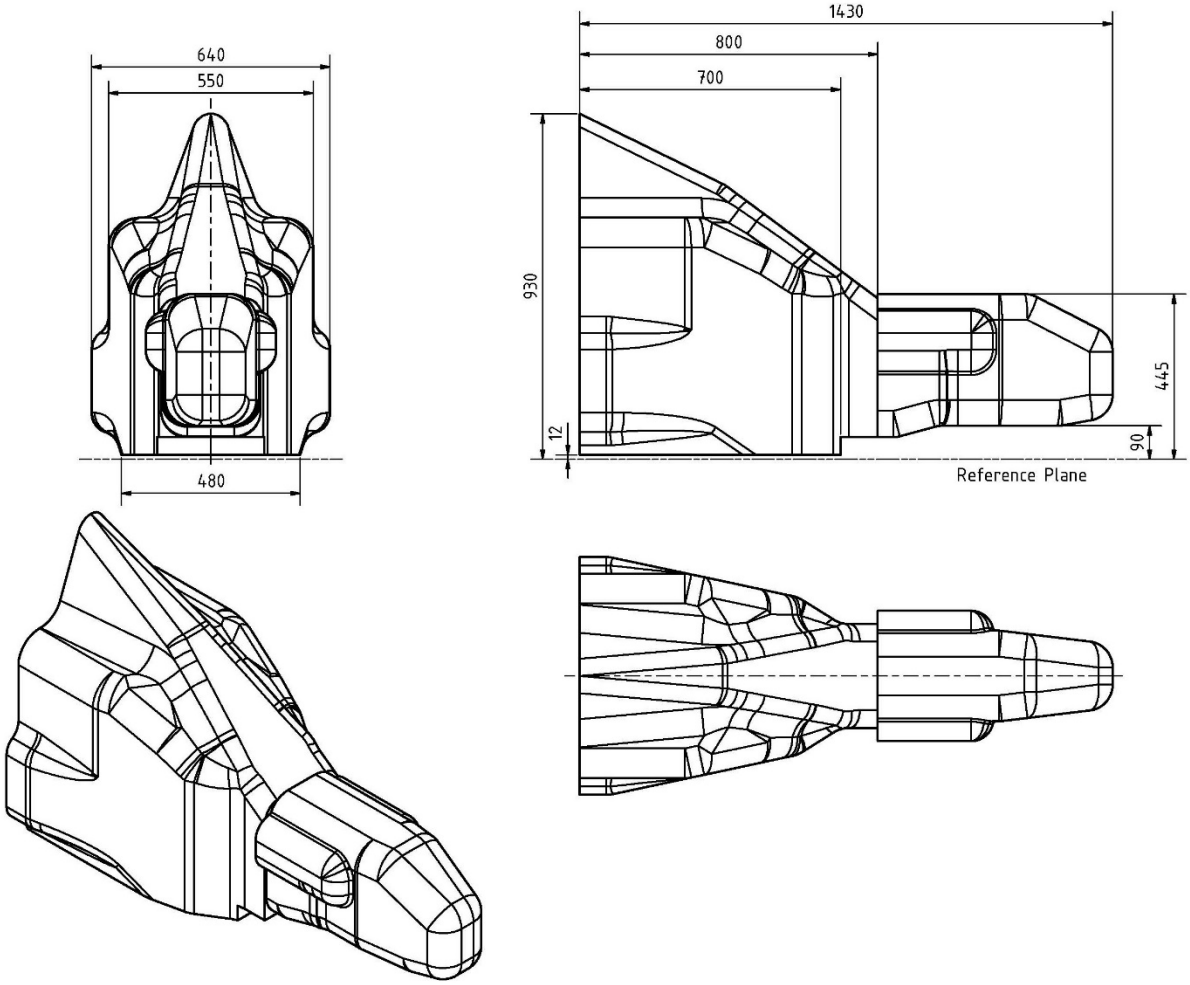

CAD model available on request from F3Technical@fia.com

Drawing 4

© 2024 Fédération Internationale de l'Automobile

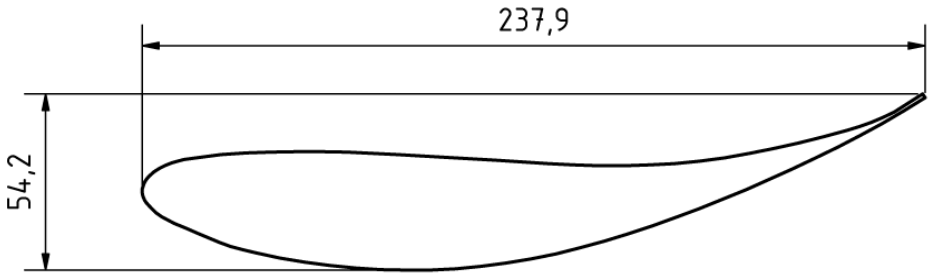

Drawing 5

Points for aerofoil section number 1, all dimensions are in millimetres (see Drawing 5):

1	00.00	00.00	**14**	-129.20	-20.46	**27**	-222.52	-42.50	**40**	-92.00	-43.84
2	-08.62	-05.50	**15**	-139.42	-19.80	**28**	-212.92	-46.08	**41**	-82.28	-40.62
3	-18.00	-09.56	**16**	-149.64	-19.16	**29**	-203.06	-48.82	**42**	-72.68	-37.10
4	-27.80	-12.48	**17**	-159.86	-18.56	**30**	-193.06	-50.94	**43**	-63.14	-33.36
5	-37.72	-15.06	**18**	-170.08	-18.08	**31**	-182.94	-52.50	**44**	-53.70	-29.42
6	-47.70	-17.32	**19**	-180.30	-17.76	**32**	-172.76	-53.54	**45**	-44.34	-25.26
7	-57.76	-19.20	**20**	-190.54	-17.68	**33**	-162.54	-54.12	**46**	-35.08	-20.92
8	-67.88	-20.64	**21**	-200.78	-17.90	**34**	-152.30	-54.20	**47**	-25.90	-16.38
9	-78.08	-21.58	**22**	-211.00	-18.46	**35**	-142.08	-53.76	**48**	-16.86	-11.60
10	-88.30	-22.04	**23**	-221.16	-19.66	**36**	-131.90	-52.80	**49**	-07.98	-06.52
11	-98.54	-22.04	**24**	-231.02	-22.34	**37**	-121.76	-51.28	**50**	00.70	-01.08
12	-108.76	-21.66	**25**	-237.22	-29.56	**38**	-111.74	-49.26			
13	-118.98	-21.10	**26**	-231.48	-37.60	**39**	-101.82	-46.76			

© 2024 Fédération Internationale de l'Automobile

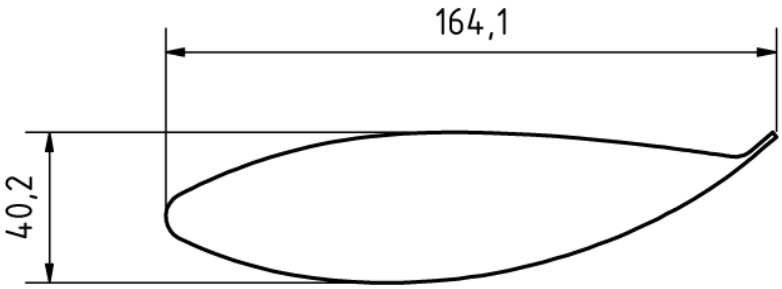

Drawing 6

Points for aerofoil section number 2, all dimensions are in millimetres (see Drawing 6):

1	163.07	00.00	**21**	59.33	-40.21	**41**	01.91	-17.91	**61**	113.59	-01.70
2	164.08	-01.19	**22**	53.95	-40.11	**42**	03.45	-16.76	**62**	120.07	-02.33
3	160.86	-03.91	**23**	48.67	-39.85	**43**	06.86	-15.04	**63**	126.34	-03.02
4	157.66	-06.63	**24**	43.43	-39.45	**44**	10.31	-13.39	**64**	132.59	-03.78
5	154.56	-09.14	**25**	38.20	-38.81	**45**	15.32	-11.20	**65**	137.90	-04.47
6	151.54	-11.46	**26**	33.00	-37.95	**46**	20.42	-09.22	**66**	143.20	-05.18
7	147.47	-14.30	**27**	27.53	-36.78	**47**	24.00	-07.95	**67**	147.47	-05.77
8	143.26	-16.99	**28**	22.17	-35.38	**48**	27.58	-06.81	**68**	151.77	-06.38
9	138.86	-19.56	**29**	17.32	-33.86	**49**	33.35	-05.18	**69**	151.94	-06.40
10	134.26	-22.02	**30**	12.55	-32.16	**50**	39.14	-03.73	**70**	152.12	-06.42
11	128.27	-24.94	**31**	09.50	-30.96	**51**	46.86	-02.21	**71**	153.01	-06.50
12	122.10	-27.69	**32**	06.55	-29.69	**52**	54.64	-01.12	**72**	153.90	-06.43
13	116.76	-29.79	**33**	05.08	-29.03	**53**	60.71	-00.53	**73**	154.76	-06.25
14	111.38	-31.70	**34**	03.71	-28.40	**54**	66.80	-00.20	**74**	155.60	-05.94
15	103.48	-34.11	**35**	02.34	-27.51	**55**	73.18	-00.03	**75**	156.39	-05.51
16	95.48	-36.22	**36**	01.22	-26.29	**56**	79.55	00.00	**76**	157.12	-05.00
17	87.17	-37.92	**37**	00.43	-24.82	**57**	86.31	-00.10	**77**	163.07	00.00
18	78.77	-39.12	**38**	00.05	-23.22	**58**	93.09	-00.33			
19	71.75	-39.78	**39**	00.13	-21.29	**59**	100.10	-00.66			
20	64.72	-40.13	**40**	00.76	-19.48	**60**	107.16	-01.14			

© 2024 Fédération Internationale de l'Automobile

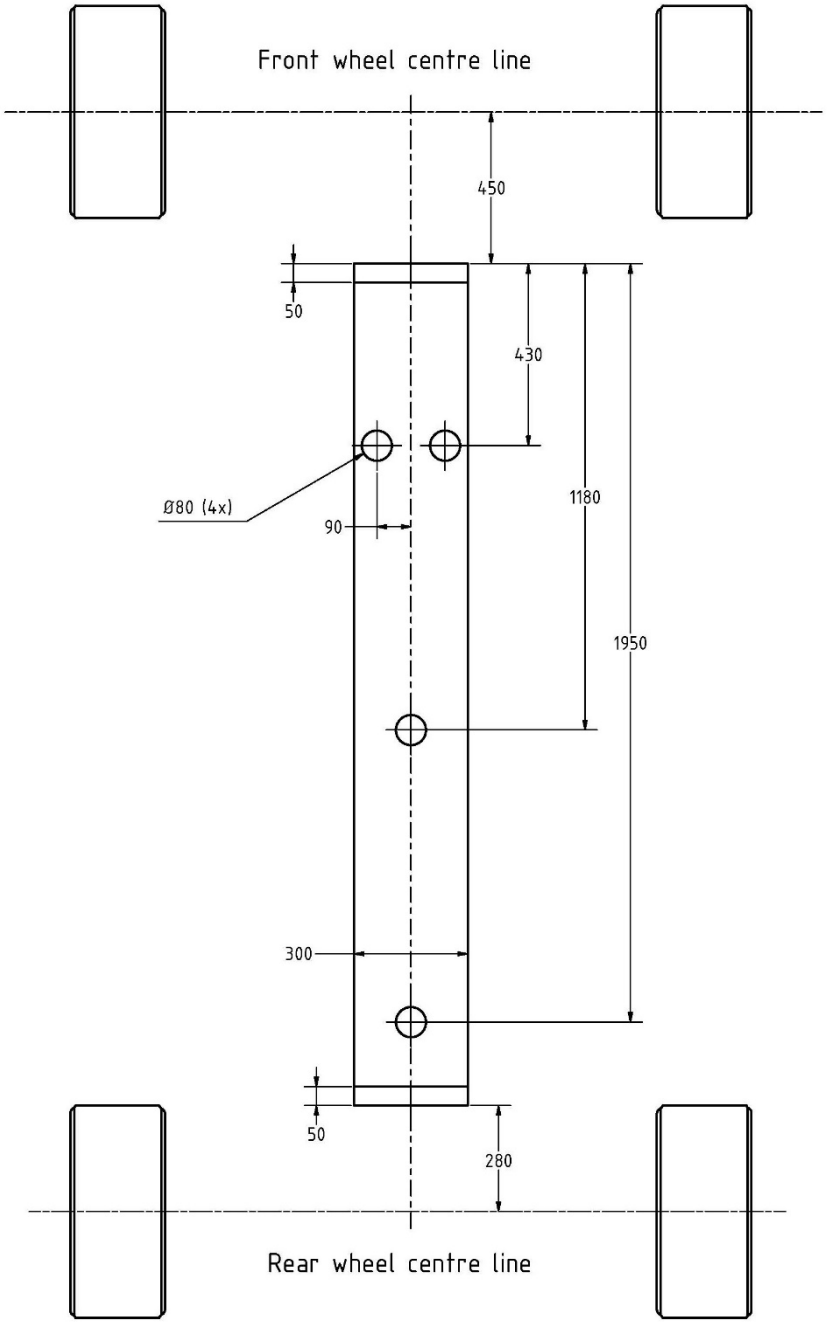

Drawing 7

© 2024 Fédération Internationale de l'Automobile

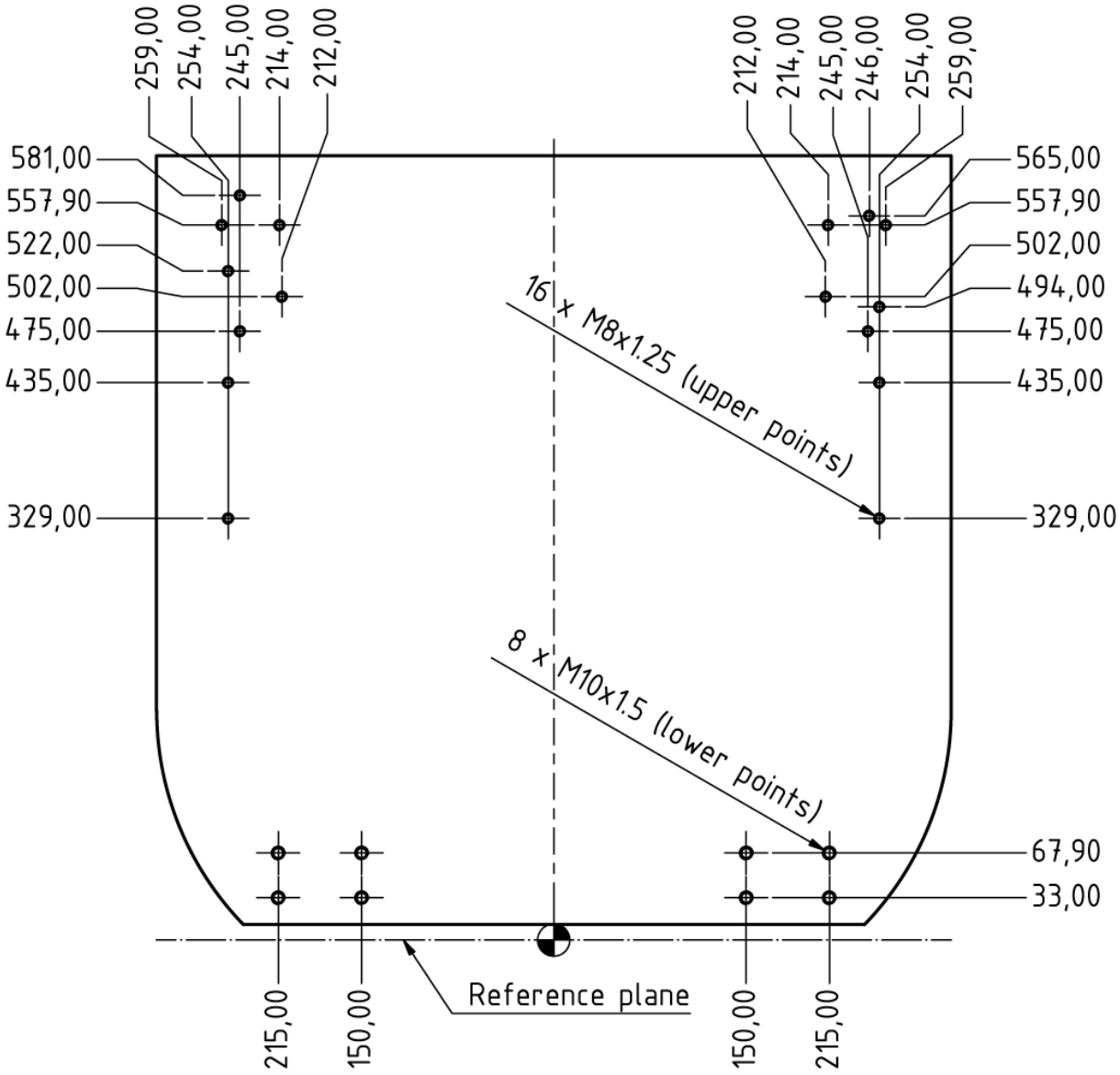

Drawing 8

© 2024 Fédération Internationale de l'Automobile

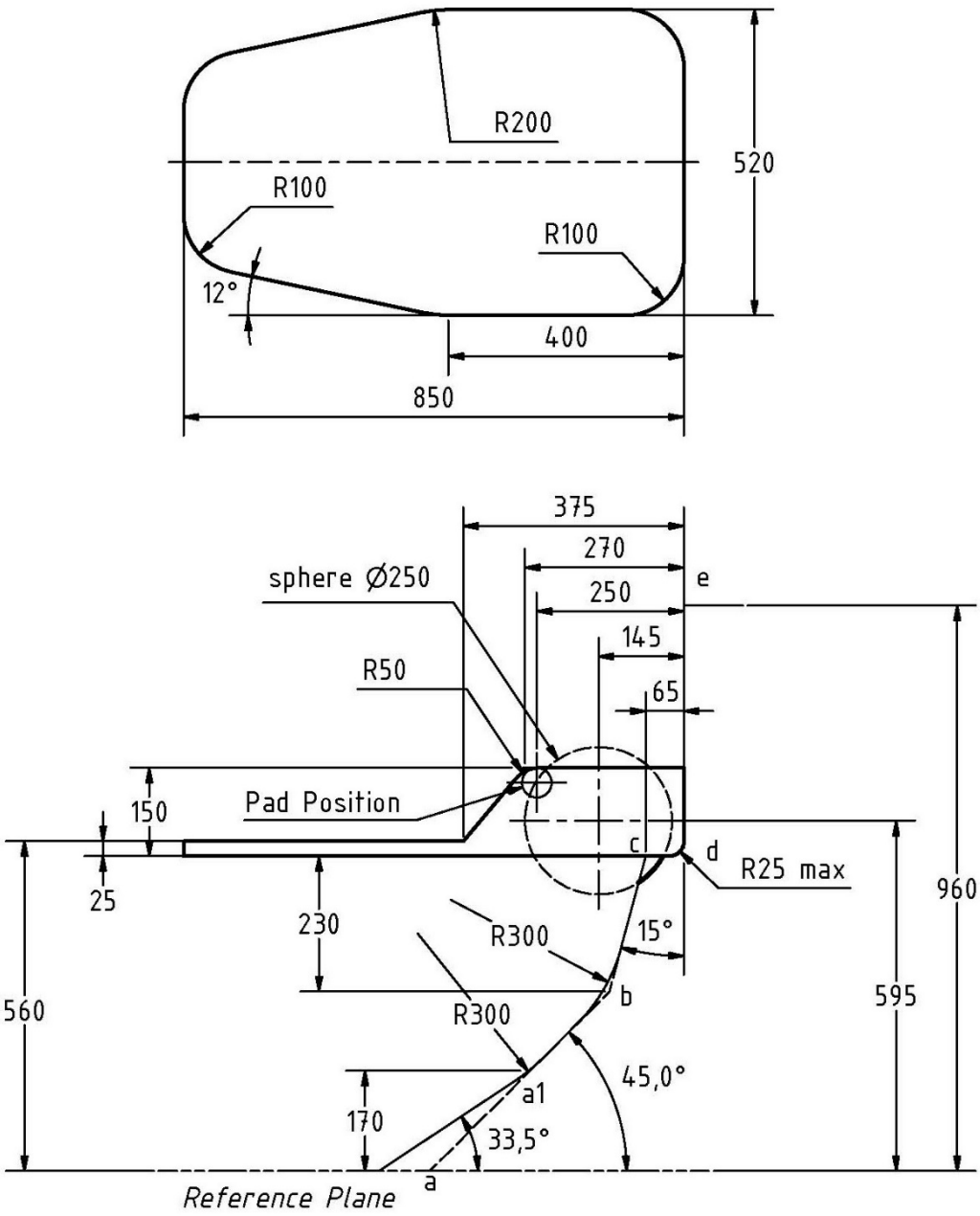

Drawing 9

© 2024 Fédération Internationale de l'Automobile

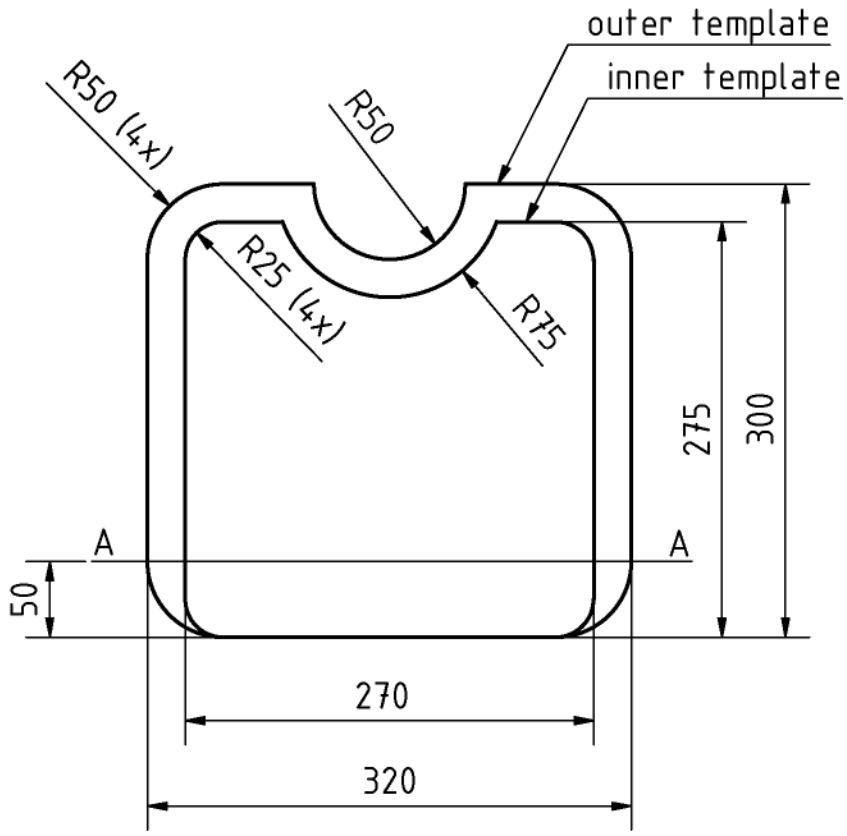

Drawing 10

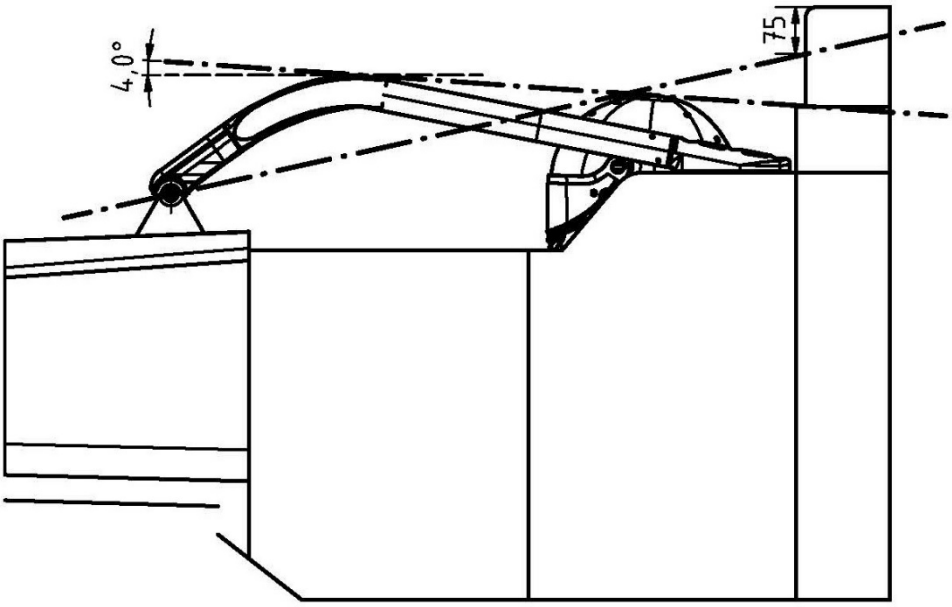

Drawing 11

© 2024 Fédération Internationale de l'Automobile

Minimum Dimensions for ES inside survival cell

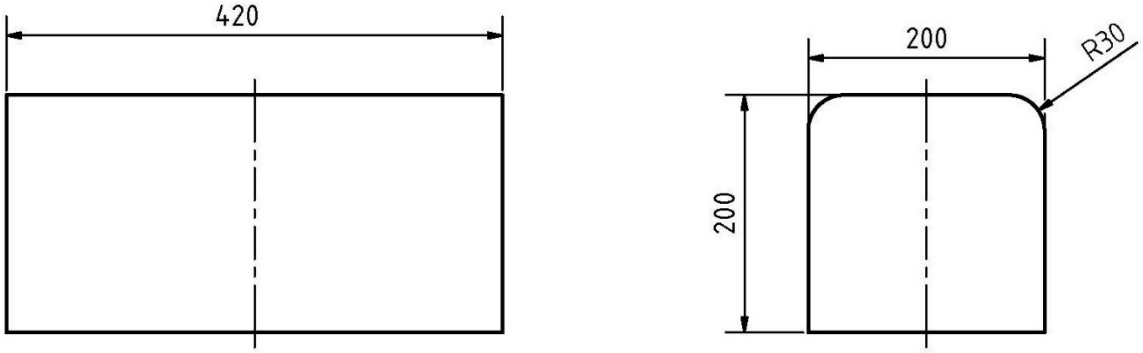

Drawing 12

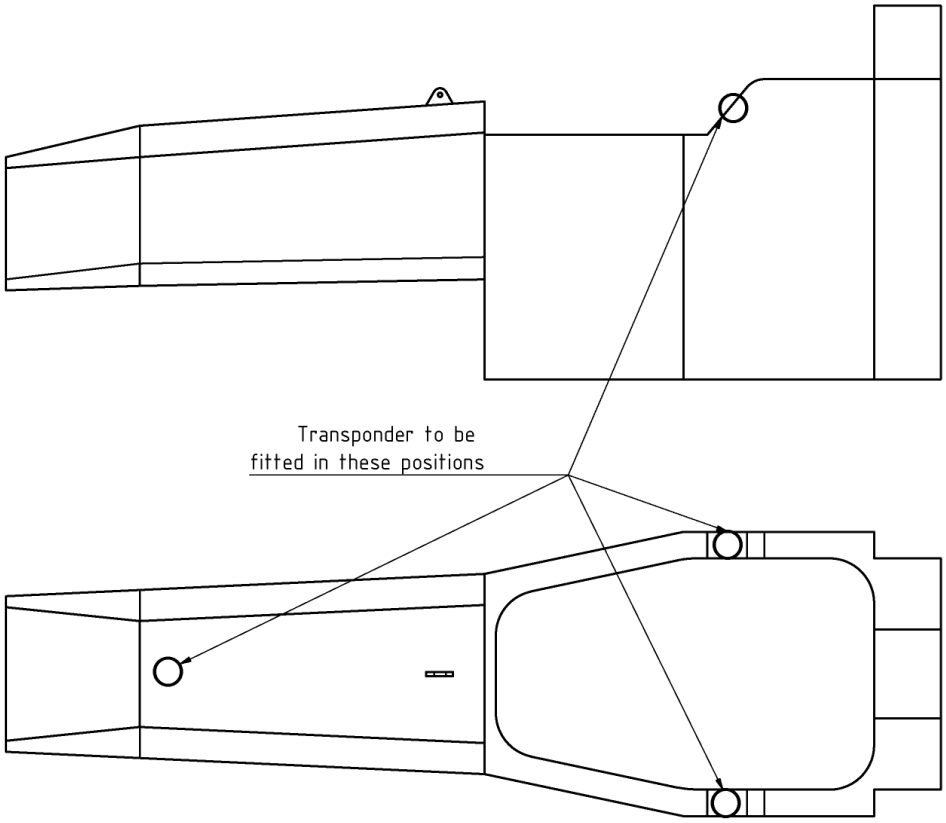

Drawing 13

© 2024 Fédération Internationale de l'Automobile

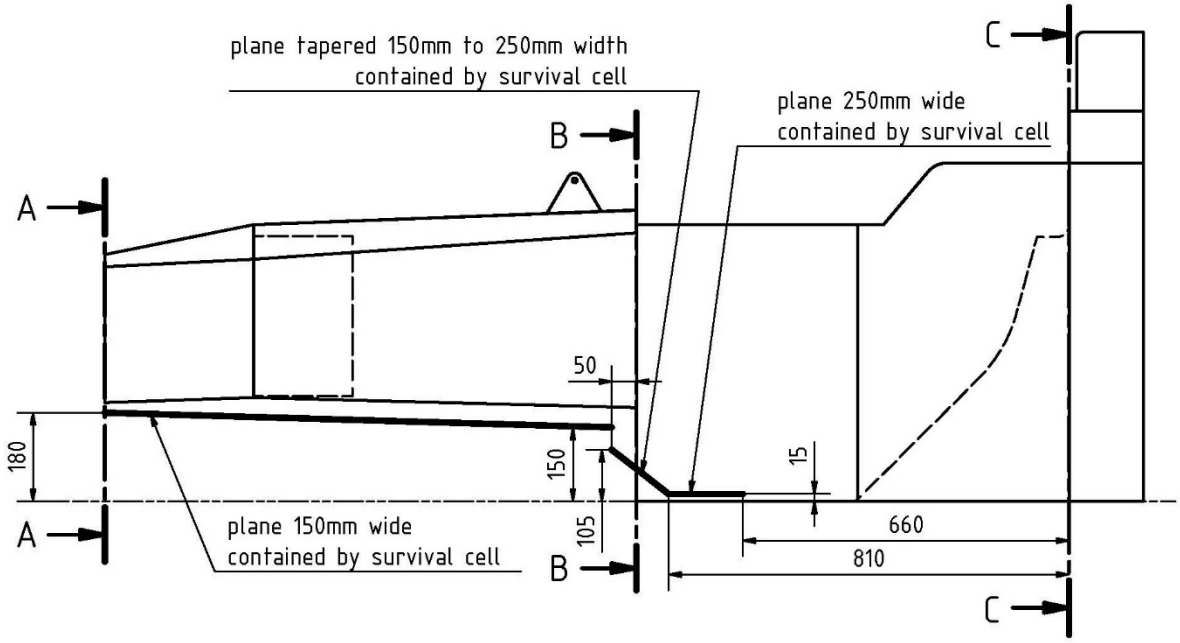

Drawing 14

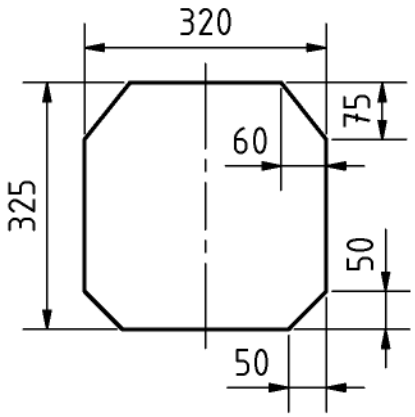

Drawing 15

© 2024 Fédération Internationale de l'Automobile

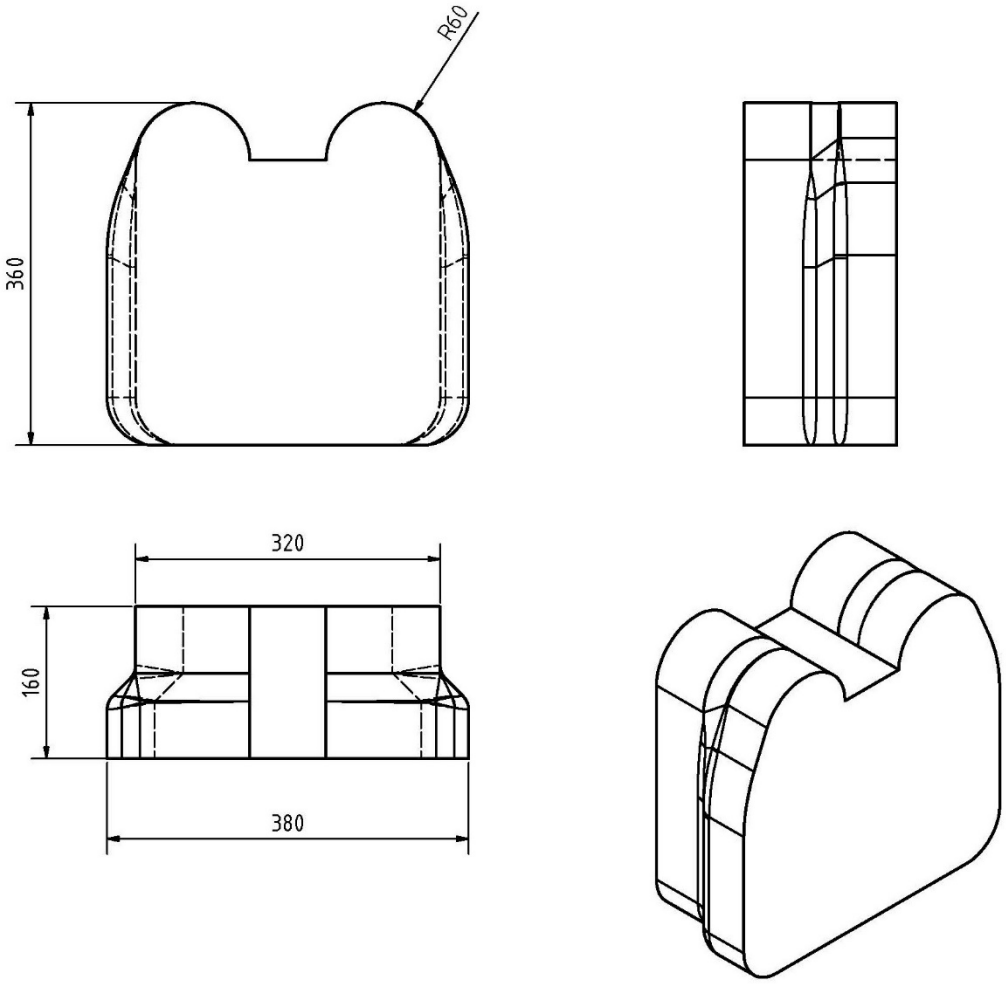

CAD model available on request from F3Technical@fia.com

Drawing 16

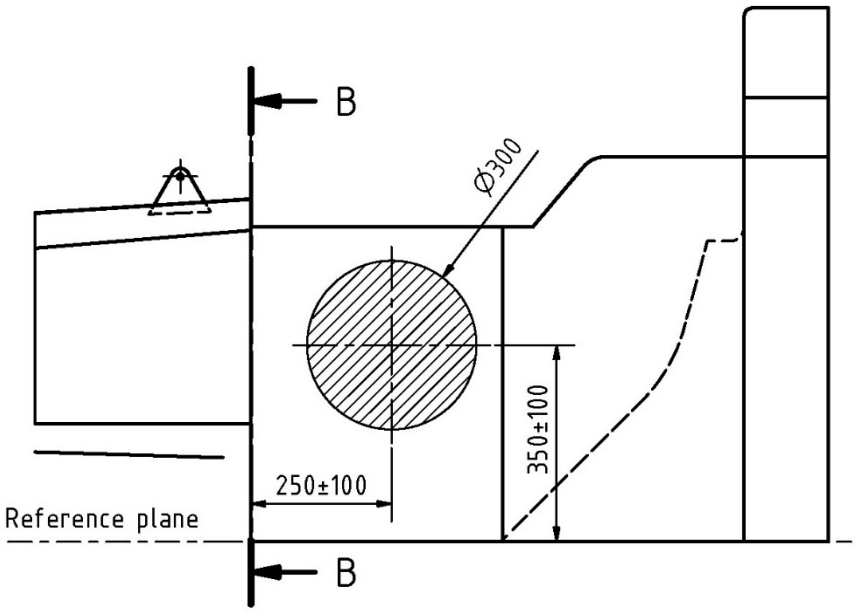

© 2024 Fédération Internationale de l'Automobile

Drawing 17

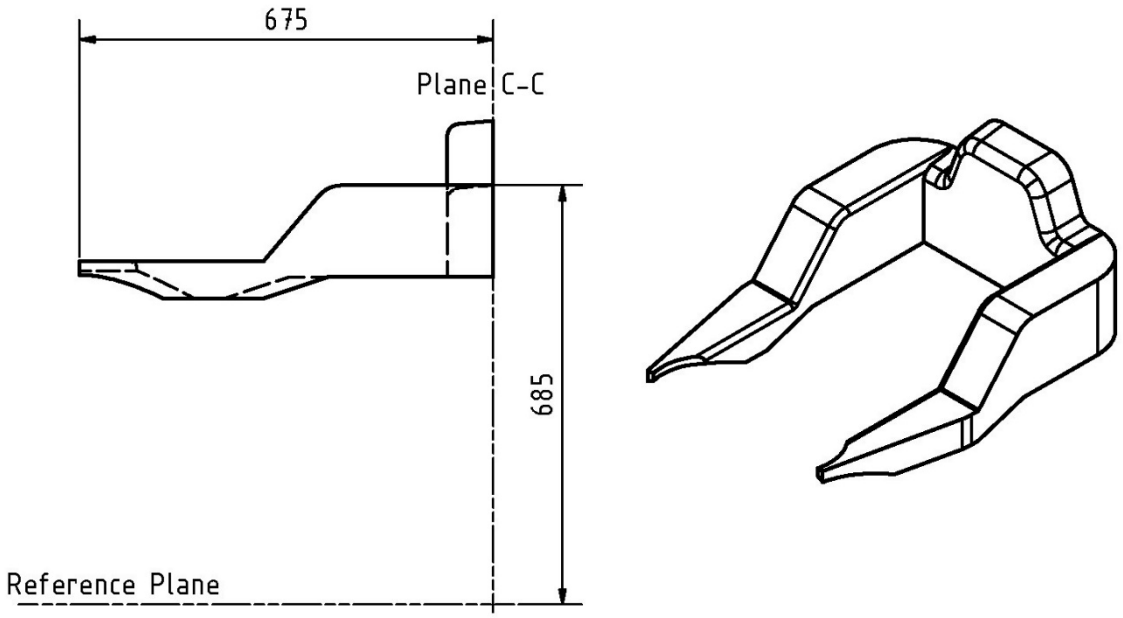

CAD model available on request from F3Technical@fia.com

Drawing 18

© 2024 Fédération Internationale de l'Automobile

APPENDIX 2

COMMON CONNECTION INTERFACE

© 2024 Fédération Internationale de l'Automobile

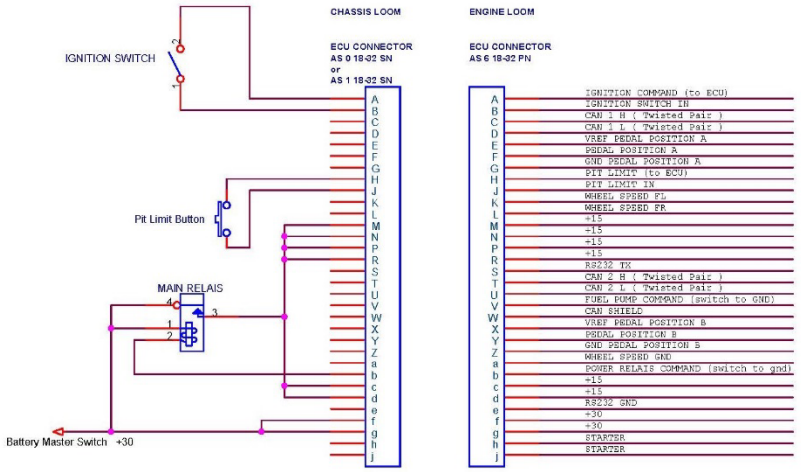

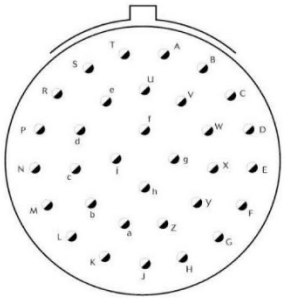

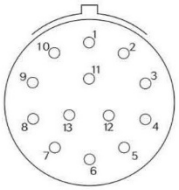

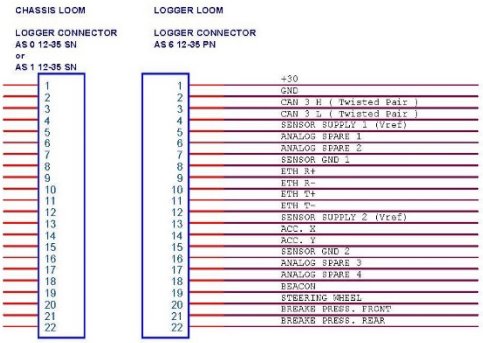

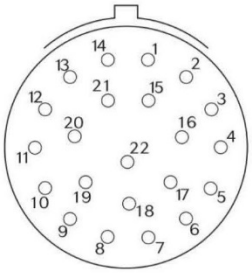

© 2024 Fédération Internationale de l'Automobile

APPENDIX 3

APPROVAL OF SAFETY STRUCTURES

© 2024 Fédération Internationale de l'Automobile

Approval of Safety Structures for Formula 4 cars

1) Safety structures

The following safety structures need to be approved by the FIA :

a) Survival cell.

b) Front and rear rollover structures.

c) Frontal impact absorbing structure.

d) Rear impact absorbing structure.

e) Side impact absorbing structure.

To approve any of the above structures, the presence of an FIA technical delegate is necessary. The static load tests need to be carried out with a measuring equipment verified by the FIA; the dynamic impact tests need to be carried out at an FIA approved institute.

2) Request for approval

To get the approval of one of the above mentioned safety structures, the FIA must receive a request from the rolling chassis manufacturer at the following address beforehand:

FIA Single Seater Department
2 Chemin de Blandonnet
CH 1215 Geneva 15
Switzerland
Tel : +41 22 544 4400
Fax : +41 22 544 4450

3) Approval procedure

Having received a request for any of the above mentioned tests, the FIA will arrange a date and venue with the rolling chassis manufacturer and will appoint a technical delegate to supervise these scheduled tests.

For each day spent by an FIA technical delegate to supervise any scheduled tests, the manufacturer will be charged a fee of € 3500.

When all the safety structure tests are carried out successfully and the manufacturer has settled the FIA fee, he will receive the FIA chassis test report for his car.

The rolling chassis manufacturer is obliged to supply all his customers with a copy of the FIA chassis test report together with the survival cell.

© 2024 Fédération Internationale de l'Automobile