September 7, 2016 **Team Memo # 0051**

To All F4 Teams

Please see attached the following updates from Crawford

Bulletin F4.02.08.24 – Forward Pedal Mount

Optional use by team, parts to order

Bulletin F4.02.08.26 – Headrest Update

Optional use by team, and standard for future supply

Bulletin F4.13.08.24 – Camera Mount

Optional use by team

Bulletin F4.05.08.24 – Rear Wheel - Drive Peg – Stub Axle – Wheel Washer

Safety critical **MANDATORY** update (as supplied at Mid-Ohio)

CRAWFORD F4

Bulletin F4.02.08.24

Forward pedal mount

1 **Mount to move pedals forward 1.12 "**

Parts reqd

Steel mount	CCF4-02-012 MOUNT PEDALS FORWARD
Heelbar	CCF4-02-016 HEELBAR PEDALS FORWARD
Steering column	CCF4-04-020 ASSEMBLY TALL COLUMN STEERING
Sensor mounting	CCF4-04-022 MOUNT TALL STEERING SENSOR

Steel mount to move pedals forward 1.12"
Mounting hardware supplied with kit to use first pair of holes in chassis
Requires tall steering column, and mount tall steering sensor

Contact - David Cooper

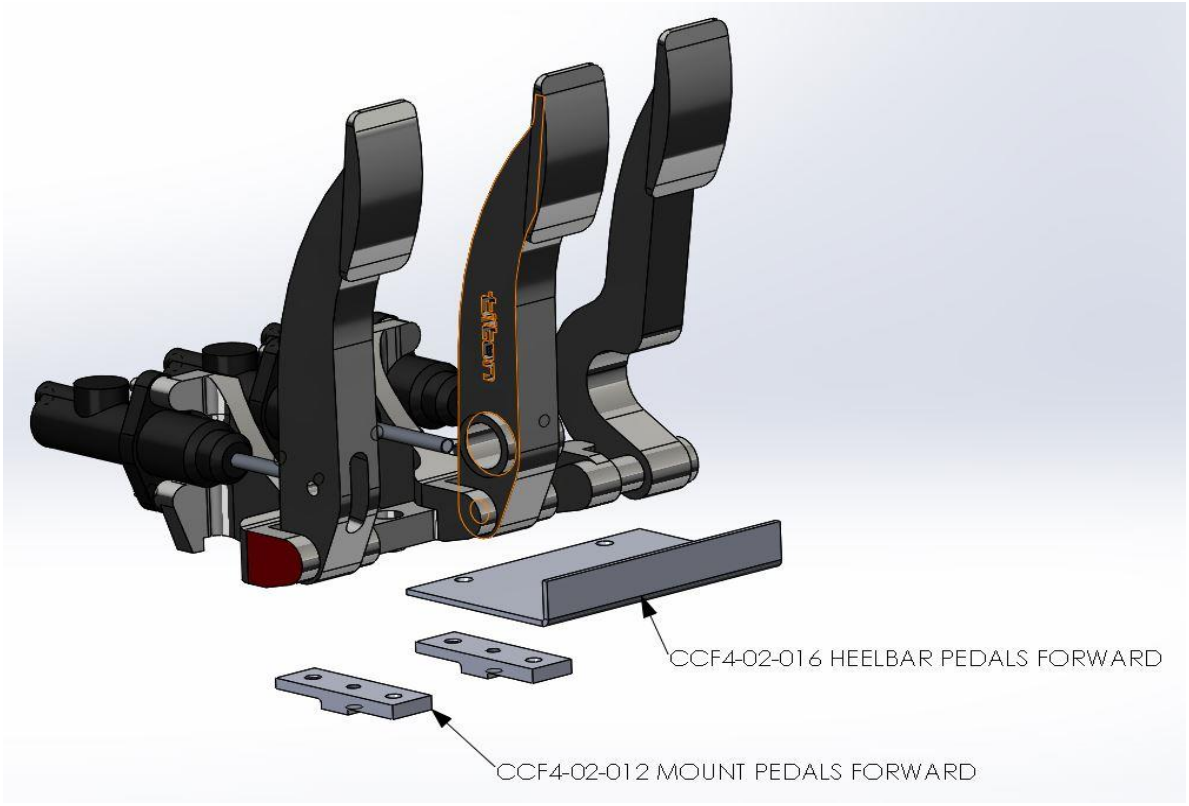

CRAWFORD F4

Bulletin F4.02.08.26

Headrest update

1 **Headrest updated to give more clearance for taller drivers**

Parts
Headrest CCF4-02-001_2 HEADREST Rev 2

Updated headrest will give more room for taller drivers
and increased clearance for the HANS device
All future headrests will be to this specification
This part has FIA homologation

Contact - Jake Poston

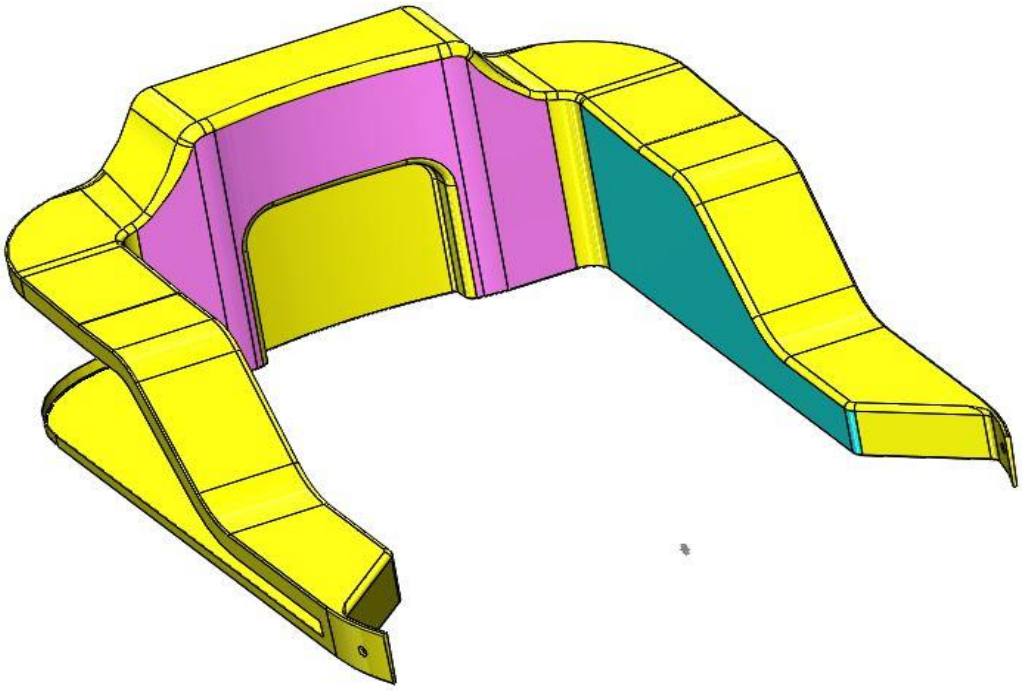

CRAWFORD F4

Bulletin F4.05.08.24

REAR WHEEL - DRIVE PEG - STUB AXLE - WHEEL WASHER

1 **Manufacturer required update**

Rear Wheels	CCF4-17-002_3 REAR WHEEL REV 3	2
Drive pegs	CCF4-05-064_2 DRIVE PEG REAR Rev 2	8
Stub Axle	CCF4-05-005_2 STUB AXLE Rev 2	2
Wheel washer	CCF4-05-065 WASHER WHEEL 2.7	2

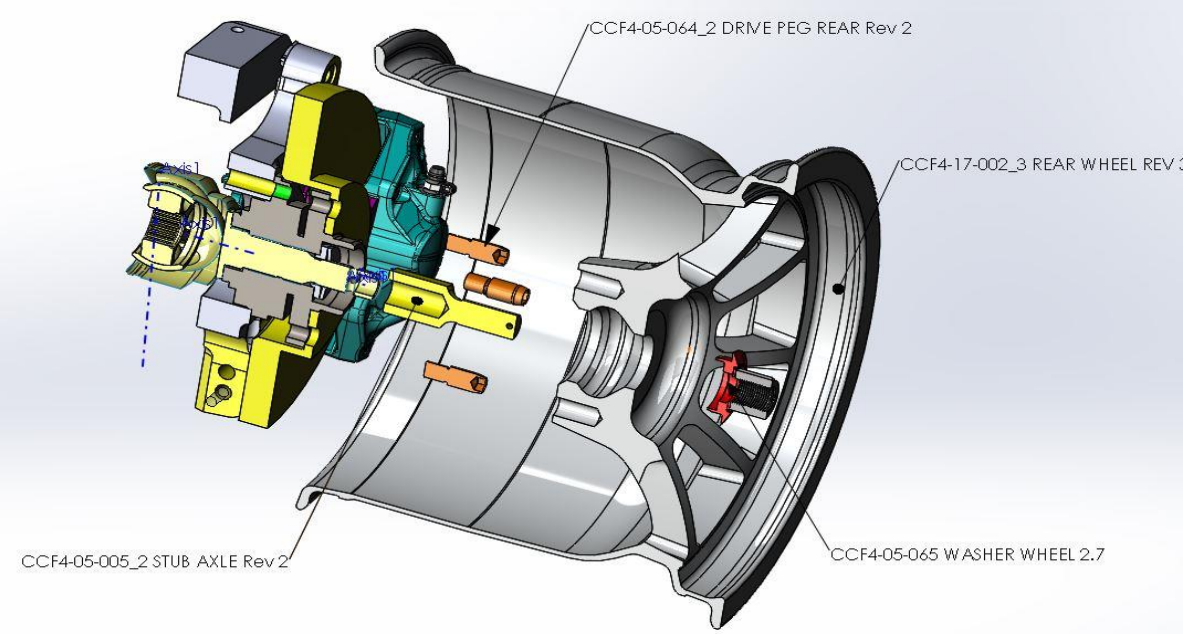

Safety critical item

Crawfords to update all rear wheels - drive pegs - stub axles - wheel washers

CRAWFORD F4

Bulletin F4.13.08.24

CAMERA MOUNT

1 **Optional Rigid camera mount**

Camera mount CCF4-13-005 MOUNT CAMERA

Rigid permanent welded steel camera mount
Universal 1/4" slot for camera mounting bolt
Customer optional

