Z9
SAC/MIDI Footswitch
Operator´s Manual

Table of Contents

	page:
Introduction	3
Features and Functionality at a Glance	3
Control Panel Features:	
Channel 1 or Patch 1/6 button	4
Channel 2 or Patch 2/7 button	5
Channel 3 or Patch 3/8 button	5
Channel 4 or Patch 4/9 button	6
Function 1 or Patch 5/10 button	6
Function 2 or Bank A/B button	7
Connections on the rear panel of the foot controller:	
Power Supply	8
Serial Amp Control Out	8
MIDI Out	8
Detailed descriptions of functions with examples and tips:	
1. Selecting channels and sound-shaping and special functions on ENGL amps in Serial Amp Control mode	8
2. Configuring the Function 1 and Function 2 buttons:	
To assign a sound-shaping and special function to Function 1 via the Function 1 Setup routine	9
To assign a sound-shaping and special function to Function 2 via the Function 2 Setup routine	10
Information and practical tips	11
3. Selecting MIDI patches in MIDI mode	12
Configuration table for the assignment of sound-shaping and special functions to Function 1 **and** Function 2 for the E670 Special Edition amp and the E570 Preamp	13
Handling and Care	14
Glossary	14
Troubleshooting	15
Technical data	17
Wiring of Principal Connectors	18
Layout: Control panel and Rear panel	18

Congratulations on your choice - the ENGL Z-9 Custom Footswitch is sure to serve you well as the switching center for your rig! With this custom-designed foot controller, you own a general-purpose tool well-suited for operating specific ENGL amps via S.A.C. (Serial Amp Control; ENGL's proprietary data protocol). As alternative to this, the Z-9 can be configured to control MIDI-enabled amps and effect devices. The ENGL Z-9 features an unique auto configuration function that - according to the type of connected cord configures it as an ENGL S.A.C. system switching center or as a basic MIDI foot controller offering 10 MIDI patches. Carrying on the ENGL tradition of turning out foot controllers boasting rugged design and striking visuals, the ENGL Custom Z-9 Footswitch is a very robust device housed in an elegant stainless steel chassis.

A quick rundown of its features and functionality follows.
When configured in S.A.C. mode to remote control specific ENGL amps and 19" rack devices, the Z-9:

1. selects channels directly via reciprocal triggering (that is, A/B switching. See page 15 to learn more.).
2. offers two freely programmable buttons that serve to control programmable sound-shaping and special functions on ENGL amps. These two special function buttons may also be integrated into the chain of four reciprocal trigger (A/B) switching functions. This affords you direct access to the switchable Tube Driver and T.D.EQ on the ENGL Special Edition amp, as well as to Preamp Defeat on the ENGL 570 Tube Preamp.
3. provides access to the switchable Master A/B, for example, on the Special Edition Amp (via the four channel selector buttons; the function is activated by pressing the button twice).
4. connects to your ENGL amp, power amp or preamp's S.A.C. port via a conventional stereo cord with 1/4" jack plugs. In this case, the stereo cord delivers the current required to power the Z-9!

When configured in MIDI foot controller mode, the Z-9:

1. selects 10 MIDI patches numbered 1 to 10 (MIDI program numbers or MPN for short) in two banks comprising five MPNs each.
2. is supplied with power via a 5-pin MIDI cord connected to ENGL amps, power amps or preamps equipped with a MIDI interface (MIDI IN), and a phantom power option that is enabled via the ENGL MIDI Foot Controller switch. An outboard power unit is not required for this type of configuration.

A tremendous advantage of the ENGL Z-9 Custom Footswitch is that it offers two remote control options - MIDI and Serial Amp Control. In the event of a damaged cord, you can immediately change over to the other option. What's more, cords equipped with stereo 1/4" jack plugs are readily available, so S.A.C. is always a viable option.

Contents:

1. ENGL Z-9 Custom Footswitch;
2. this manual;

Among the hallmarks of this Footpedal are painstaking workmanship and finishing as well as rigorously tested and carefully selected quality components. You'll find guidelines on care and maintenance on page 14. Under the heading Tips from the designer, you'll come across practical tips on the aforementioned features throughout the manual. All critical information concerning the operation of this Footswitch board is preceded by "NOTE", "CAUTION" or some other eye-catching comment. We're calling your attention to these remarks for reasons of safety or other compelling motives, so please give them due consideration.

A few words of wisdom from the designer:
Your first impression may be that handling the foot controller is complicated. To nip frustration in the bud, I suggest you follow along with the examples on pages 8, 9, 10, 11 and 12. This will give you a better understanding of and hands-on experience with the foot controller's functionality. In no time at all, you'll discover that it actually handles very comfortably and conveniently.

Control panel features

At page 18 of the manual, you'll find diagrams of the control panel.

The Z-9 Foot Controller offers two operating modes:
Serial Amp Control (S.A.C.) mode:
In this mode, the Z-9 Foot Controller switches ENGL amps via a command set called Serial Amp Control (S.A.C.). The Z-9 is automatically configured in MIDI or S.A.C. mode when you insert a connector into the selected port (MIDI Out or S.A.C. Out).
or
MIDI mode:
This MIDI function offers 10 MIDI patches (or MPNs) in two banks called A and B.

A detailed look at control and display features as well as ports and connectors follows:
Channel 1 **or** Patch 1/6 **button**
Channel 1:
When you press this button in S.A.C. mode, it activates a specific channel on an ENGL amp, for example, Clean. The Channel 1 button's switching action reciprocates with the Channel 2, Channel 3 and Channel 4 buttons. This means that rather than serving as a simple on/off switch, the four Channel buttons are A/B switches that activate a new channel and deactivate the currently active channel. Note that for all Function 1 configurations other than F1-1 in the Function 1 Setup, pressing the button a second time controls a special function on the amp (for example, Master A/B on the E670). The LED 1 above the button lights up to indicate the currently active channel; a flashing LED 1 indicates the activated channel and the activated function (say, Clean and Master B on the E670 amp). To access the Function 1 or Function 2 Setup routine, press and hold this button and the Function 1 or Function 2 button until the LED above the given button flashes. When the Function 1 Setup or Function 2 Setup routine is activated, this button serves to assign two sound-shaping or special functions on ENGL

amps to the Function 1 and Function 2 button. You'll find an overview of sound-shaping and special functions available on the ENGL Special Edition E670 and the ENGL Preamp E570 in the table on page 13.
Patch 1/6:
When you press this button in MIDI mode, it selects MIDI patch 1 in bank A and MPN 6 in bank B. Pressing this button sends the given MPN to MIDI Out via MIDI channel 1.

Channel 2 **or** Patch 2/7 **button**
Channel 2:
When you press this button in S.A.C. mode, it activates a specific channel on an ENGL amp, for example, Crunch. The Channel 2 button's switching action reciprocates with the Channel 1, Channel 3 and Channel 4 buttons. This means that rather than serving as a simple on/off switch, the four Channel buttons are A/B switches that activate a new channel and deactivate the currently active channel. Note that for all Function 1 configurations other than F1-1 in the Function 1 Setup, pressing the button a second time controls a special function on the amp (for example, Master A/B on the E670). The LED 2 above the button lights up to indicate the currently active channel; a flashing LED 2 indicates the activated channel and the activated function (say, Crunch and Master B on the E670 amp). When the Function 1 Setup or Function 2 Setup routine is activated, this button serves to assign two sound-shaping or special functions on ENGL amps to the Function 1 and Function 2 button. You'll find an overview of sound-shaping and special functions available on the ENGL Special Edition E670 and the ENGL Preamp E570 in the table on page 13.
Patch 2/7:
When you press this button in MIDI mode, it selects MIDI patch 2 in bank A and MPN 7 in bank B. Pressing this button sends the given MPN to MIDI Out via MIDI channel 1.

Channel 3 **or** Patch 3/8 **button**
Channel 3:
When you press this button in S.A.C. mode, it activates a specific channel on an ENGL amp, for example, Lead I. The Channel 3 button's switching action reciprocates with the Channel 1, Channel 2 and Channel 4 buttons. This means that rather than serving as a simple on/off switch, the four Channel buttons are A/B switches that activate a new channel and deactivate the currently active channel. Note that for all Function 1 configurations other than F1-1 in the Function 1 Setup, pressing the button a second time controls a special function on the amp (for example, Master A/B on the E670). The LED 3 above the button lights up to indicate the currently active channel; a flashing LED 3 indicates the activated channel and the activated function (say, Lead I and Master B on the E670 amp). When the Function 1 Setup or Function 2 Setup routine is activated, this button serves to assign two sound-shaping or special functions on ENGL amps to the Function 1 and Function 2 button. You'll find an overview of sound-shaping and special functions available on the ENGL Special Edition E670 and the ENGL Preamp E570 in the table on page13.
Patch 3/8:
When you press this button in MIDI mode, it selects MIDI patch 3 in bank A and MPN 8 in bank B. Pressing this button sends the given MPN to MIDI Out via MIDI channel 1.

Channel 4 **or** Patch 4/9 **button**

Channel 4:

When you press this button in S.A.C. mode, it activates a specific channel on an ENGL amp, for example, Lead II. The Channel 4 button's switching action reciprocates with the Channel 1, Channel 2 and Channel 3 buttons. This means that rather than serving as a simple on/off switch, the four Channel buttons are A/B switches that activate a new channel and deactivate the currently active channel. Note that for all Function 1 configurations other than F1-1 in the Function 1 Setup, pressing the button a second time controls a special function on the amp (for example, Master A/B on the E670). The LED 4 above the button lights up to indicate the currently active channel; a flashing LED 4 indicates the activated channel and the activated function (say, Lead II and Master B on the E670 amp). When the Function 1 Setup or Function 2 Setup routine is activated, this button serves to assign two sound-shaping or special functions on ENGL amps to the Function 1 and Function 2 button. You'll find an overview of sound-shaping and special functions available on the ENGL Special Edition E670 and the ENGL Preamp E570 in the table on page 13.

Patch 4/9:

When you press this button in MIDI mode, it selects MIDI patch 4 in bank A and MPN 9 in bank B. Pressing this button sends the given MPN to MIDI Out via MIDI channel 1.

Function 1 **or** Patch 5/10 **button**

Function 1 :

When you press this button in S.A.C. mode, it controls a previously programmed sound-shaping or special function on an ENGL amp. The LED 5 above the button lights up to indicate the function is active. Assign the desired sound-shaping or special function to Function 1 in the Function 1 Setup routine. Access this configuration routine by simultaneously pressing the Channel 1 and Function 1 buttons until LED 5 above the button flashes. Press the Function 1 button to confirm your selection and to activate the Function 1 Setup routine. Using the Channel 1, Channel 2, Channel 3 and Channel 4 buttons, you can then select the amp's sound-shaping or special functions that you want to remote control via the Function 1 button. You have up to eight different settings to choose from for Function 1 : Each Channel button offers two different sound-shaping or special functions; switch between the two options by pressing the given Channel button twice. The LED assigned to this Channel button illuminates continuously to signify one option, and flashes to signify the other. Immediately after you have confirmed the Function 1 Setup, one of the LEDs above the Channel buttons lights up or flashes to show the current configuration. To store a new assignment, press and hold the Function 2 button until LED 6 above the Function 2 button lights up. The Z-9 stores the given configuration (that is, your assignment of a sound-shaping or special function on the amp to the Function 1 button) in its nonvolatile memory so that the setup is retained after you power it down. In case Function 1 is programmed to configuration F1-5, Function 1 button's switching action also reciprocates with the Channel 1, Channel 2, Channel 3 and Channel 4 buttons. Note that for this special configuration pressing the button a second time controls a special function on the amp (for example, Master A/B on the E670). The LED 5 above the button lights up to indicate the currently active channel; a flashing LED 5 indicates

the activated channel and the activated function (say, Tube Driver and Master B on the E670amp).

Patch 5/10:

When you press this button in MIDI mode, it selects MIDI patch 5 in bank A and MIDI patch 10 in bank B. Pressing this button sends the given MPN to MIDI Out via MIDI channel 1.

Function 2 **or** Bank A/B **button**

Function 2 :

When you press this button in S.A.C. mode, it controls a previously programmed sound-shaping or special function on an ENGL amp. LED 6 above the button lights up to indicate the function is active. Assign the desired sound-shaping or special function to Function 2 in the Function 2 Setup routine. Access this configuration routine by simultaneously pressing the Channel 1 and Function 2 buttons until LED 6 above the button flashes. Press the Function 2 button to confirm your selection and to activate the Function 2 Setup routine. Using the Channel 1, Channel 2, Channel 3 and Channel 4 buttons, you can then select the amp's sound-shaping or special functions that you want to remote control via the Function 2 button. You have up to eight different settings to choose from for Function 2 : Each Channel button offers two different sound-shaping or special functions; switch between the two options by pressing the given Channel button twice. The LED assigned to this Channel button illuminates continuously to signify one option, and flashes to signify the other. Immediately after you have confirmed the Function 2 Setup, one of the LEDs above the Channel buttons lights up or flashes to show the current configuration. To store a new assignment, press and hold the Function 1 button until the LED 5 above the Function 1 button lights up. The Z-9 stores the given configuration (that is, your assignment of a sound-shaping or special function on the amp to the Function 2 button) in its nonvolatile memory so that the setup is retained after you power it down. In case Function 2 is programmed to configuration F2-5, Function 2 button's switching action also reciprocates with the Channel 1, Channel 2, Channel 3 and Channel 4 buttons. Note that for this special configuration (Function 2 set to F2-5 and Function 1 set other than F1-1 in the Function 1 Setup) pressing the button a second time controls a special function on the amp (for example, Master A/B on the E670). The LED 6 above the button lights up to indicate the currently active channel; a flashing LED 6 indicates the activated channel and the activated function (say, Tube Driver and Master B on the E670amp).

Bank A/B:

In MIDI mode, this button selects Bank A or B. Press it to change banks. LED 6 above this button as well as the LED above the button for the most recently activated MPN flashes. Press a MIDI Patch button to select the desired MIDI patch. LED 6 above the Bank A/B button extinguishes to indicate Bank A or lights up to indicate Bank B. Bank A contains MPN 1, MPN 2, MPN 3, MPN 4 and MPN 5; Bank B contains MPN 6, MPN 7, MPN 8, MPN 9 and MPN 10.

Connections on the rear panel of the foot controller

At page 18 of the manual, you'll find diagrams of the rear panel.

Power Supply

This socket accepts an external power unit for the Z-9. When connecting a power unit, ensure voltage and current comply with the foot controller's specifications.
You may connect an AC (alternating current) power unit as well as a 100-mA DC (direct current) power unit. The AC voltage range is 7 to 14 volts; the DC voltage range is 9 to 20 volts. The polarity at the plug plays no role.
IMPORTANT NOTE: This type of power supply is not required if the footcontroller is connected to an ENGL amp that features an S.A.C. Port or a MIDI In port that provides phantom power for the footcontroller.

Serial Amp Control Out

This stereo jack routes out S.A.C. commands. Connect it to the S.A.C. port (stereo jack plug) on an ENGL amp using a cord equipped with stereo 1/4" jack plugs. When connected to an ENGL amp's S.A.C port, this stereo cord also provides power to the Z-9.
Heads up critical info: Connect the Z-9 Foot Controller's S.A.C. Out **stereo jack to an ENGL amp's** S.A.C. port **(stereo jack) only! Connecting it to any other jack may damage the Z-9 and amp!**

MIDI OUT

This 5-pin DIN port serves to route out MIDI data. Connect it to the MIDI In of an ENGL amp or a MIDI-enabled device using a suitable MIDI cord. A 5-pin cord connected to the MIDI IN port of an ENGL amp can provide power to the foot controller. To this end, you must set the ENGL amp's phantom power selector accordingly, that is, to the ENGL MIDI Foot Controller position.

Detailed descriptions of functions with examples and tips follow:

1. Selecting channels and sound-shaping and special functions on ENGL amps in Serial Amp Control mode

This mode is only active when the Z-9 Foot Controller is connected to the S.A.C. port on an ENGL amp using a cord with stereo 1/4" jack plugs. As soon as the footcontroller is powered up, LEDs 1 to 4 act as a light chain flashes to indicate S.A.C. mode is active, illuminating successively from right to left while LEDs 5 and 6 flashes. In this mode, you can switch four channels on ENGL amps directly by pressing the Channel 1 to Channel 4 buttons, and control two sound-shaping or special functions using the Function 1 and Function 2 buttons. If required, the two Function buttons can also be configured as reciprocal triggers (or A/B switches, if you prefer) for selecting auxiliary channels (for instance, the E670's Tube Driver or the E570's Preamp Defeat).
Examples:
To select the Clean channel (Channel 1) on the Special Edition Amp E670:
-> Press Channel 1 briefly; LED 1 above the button lights up;
Z-9 sends the corresponding S.A.C. command to S.A.C. Out;

To select the Lead I channel (Channel 3) and Master B on the ENGL Special Edition Amp E670:
-> Press Channel button 3 twice; LED 3 above the button flashes;
Z-9 sends the corresponding S.A.C. command to S.A.C. Out.
Note: To this end, Function 1 must be configured accordingly in the Function 1 Setup routine; that is, Function 1's configuration may not be equal to F1-1*.
To select the Crunch channel (Channel 2) and Master A on the ENGL Special Edition Amp E670:
-> Press Channel 2; LED 2 above the button lights up.
Z-9 sends the corresponding S.A.C. command to S.A.C. Out.
Note: To this end, Function 1 must be configured accordingly in the Function 1 Setup routine; that is, Function 1's configuration is not equal to F1-1*.
To activate Hi Gain and Gain Boost on the Special Edition Amp E670 or the Preamp E570:
-> Press Function 1; LED 5 above the button lights up;
Z-9 sends the corresponding S.A.C. command to S.A.C. Out.
Note: To this end, Function 1 must be configured accordingly in the Function 1 Setup routine; that is, Function 1's configuration is equal to F1-6*.
Mega Lo Punch (M.L.P.) on the Special Edition Amp or Preamp E570 activates:
-> Press Function 2; LED 6 above the button lights up;
Z-9 sends the corresponding S.A.C. command to S.A.C. Out.
Note: To this end, Function 2 must be configured accordingly in the Function 2 Setup routine; that is, Function 2's configuration is equal to F2-3*.
* See Comments on page 13 and 14 to learn what this designation means.

A tip from the designer:
Serial Amp Control is a convenient remote control option for your ENGL amps. It comes highly recommended if you do not work with a MIDI system or hands-free selection of channels and control of two sound-shaping or special functions of the amp (for example, Hi Gain and Mega Lo Punch via the two Function buttons) suffices for your musical purposes.
If you want or need a greater range of remote control options for manipulating your amp's sound-shaping and special functions on the fly, your best bet is to program the desired settings for these functions to the 10 MIDI patches and access the presets in MIDI mode.

2. Configuring the Function 1 **and** Function 2 **buttons:**
To assign a sound-shaping and special function to Function 1 **via the** Function 1 Setup **routine:**
-> Press and hold Channel 1 and Function 1 simultaneously until LED 5 above the Function 1 button flashes.
Note: If the Function 1 button is programmed for A/B switching (F1-5, "reciprocal triggered" with the four channels) and the B function is currently active, LED 5 above the button will flash before you activate the Function 1 Setup routine. In this event, switch to the A function first and watch the LED to ensure it indicates you have activated Function 1 Setup.
-> Press the Function 1 button to confirm the Function 1 Setup routine.

LED 5 above the Function 1 button lights up and the amp function(s) currently assigned to this button is/are activated. If the Function 1 button is programmed for A/B switching (F1-5, "reciprocal triggered" with the four channels), the amp will switch to the corresponding channel (for example, Tube Driver or Preamp Defeat). One of the LEDs 1 to 4 located above the Channel 1 to Channel 4 buttons will light up or flash to indicate the amp's sound-shaping or special function that is currently assigned to the Z-9's Function 1 button.

Here's how to select the desired sound-shaping or special function on your amp via the Z-9's Function 1 using one of the four Channel 1, Channel 2, Channel 3 and Channel 4 buttons: Press the appropriate button once or twice for the given configuration. The table on page 13 lists the assignments of sound-shaping and special functions to Function 1.

Example: Say you want Function 1 to control the sound-shaping functions Modern/Classic (S.A.C. command F1-2) on the Special Edition Amp E670 or Preamp E570. Note that for purposes of this example, the sound-shaping functions Gain Boost and Hi Gain (via the common S.A.C. command F1-6) are currently assigned to Function 1.

-> Press and hold Channel 1 and Function 1 simultaneously until the LED 5 above the Function 1 button flashes.

-> Press the Function 1 button to confirm the Function 1 Setup routine. LED 5 above the Function 1 button lights up and LED 2 above the Channel 2 button flashes to indicate the current configuration F1-6.

-> Press Channel 2 once or twice until LED 2 lights up to indicate the new Function 1 configuration, which is F1-2.

-> Store it by pressing and holding the Function 2 button until LED 6 lights up once briefly.

To assign a sound-shaping and special function to Function 2 **via the F**unction 2 Setup **routine:**

-> Press and hold Channel 1 and Function 2 simultaneously until LED 6 above the Function 2 button flashes.

Note: If the Function 2 button is programmed for A/B switching (F2-5, "reciprocal triggered" with the four channels and Function 1 configurations other than F1-1) and the B function is currently active, LED 6 above the button will flash before you activate the Function 2 Setup routine. In this event, switch to the A function first and watch the LED to ensure it indicates you have activated Function 2 Setup.

-> Press the Function 2 button to confirm the Function 2 Setup routine. LED 6 above the Function 2 button lights up and the amp function(s) currently assigned to this button is/are activated. If the Function 1 button is programmed for A/B switching (F2-5, means "reciprocal triggered" with the four channel buttons), the amp will switch to the corresponding channel (for example, Tube Driver EQ on the E670). One of the LEDs above the Channel 1 to Channel 4 buttons will light up or flash to indicate the amp's sound-shaping or special function that is currently assigned to the Z-9's Function 2 button.

Here's how to select the desired sound-shaping or special function on your amp via the Z-9's Function 2 using one of the four Channel 1, Channel 2, Channel 3 or

Channel 4 buttons: Press the appropriate button once or twice for the given configuration. The table on page 13 lists the assignments of sound-shaping and special functions to Function 2.

Example: Say you want Function 2 to control the sound-shaping function Mega Lo Punch (S.A.C. command F2-3) on the Special Edition Amp E670 or the Preamp E570. Note that for purposes of this example, the sound-shaping functions Ultra Bright & Mid Edge (via the common S.A.C. command F2-6) are currently assigned to Function 2.

-> Press and hold Channel 1 and Function 2 simultaneously until LED 6 above the Function 2 button flashes.
-> Press the Function 2 button to confirm the Function 2 Setup routine. LED 6 above the Function 2 button lights up and LED 2 above the Channel 2 button flashes to indicate the current configuration F2-6.
-> Press Channel 3 once or twice until LED 3 lights up to indicate the new Function 2 configuration, which is F2-3.
-> Store it by pressing and holding the Function 1 button until LED 5 lights up once briefly.

A tip from the designer:

Consult the configuration table on page 13 for the Function 1 and Function 2 buttons' assignments to sound-shaping or special functions on your ENGL amp. There is an alternative method that is very helpful when you don't have the configuration table at hand. Use the two Function 1 Setup and Function 2 Setup routines to run a quick configuration check:

-> Press Channel 1 and Function 1 simultaneously to access Function 1 Setup; confirm by pressing Function 1 as soon as the LED 5 above the button flashes.
-> Press Channel 1; the LED 1 above the button lights up or flashes, depending on its prior status.
-> Press Function 1 several times; LED 5 above the button lights up and extinguishes while the LED for the given sound-shaping or special function on your ENGL amp does the same. Watch the amp and note which amp function responds when you press Function 1.
-> Press the Channel 2, Channel 3 and Channel 4 buttons and follow the same procedure.
-> Go to the second configuration level (F1-5) by pressing Channel 1 once or twice; press Function 1 and note which sound-shaping or special function on the amp responds.
-> Go to the second configuration level (F1-6 to F1-8) of the Channel 2, Channel 3 and Channel 4 buttons and proceed as described above.
-> Once you have found the desired sound-shaping or special function for Function 1 (for example, Modern/Classic, which is accessed via the configuration F1-2), you can store it by pressing the Function 2 button.
-> Press and hold the Function 2 button until LED 6 lights up once briefly.

Proceed in the same manner for Function 2:

-> Press Channel 1 and Function 2 simultaneously to access Function 2 Setup.
-> Confirm by pressing Function 2 as soon as the LED 6 above the button flashes.
-> Once you have found the desired sound-shaping or special function

for Function 2 (for example, Mega Lo Punch/M.L.P., which is accessed via the configuration F2-3), you can store it by pressing the Function 1 button.

-> Press and hold the Function 1 button until LED 5 lights up once briefly.

There are two configuration levels. The first level comprises F1-1 to F1-4 and F2-1 to F2-4; the LED above the respective Channel button light to indicate the given configuration. The second level comprises F1-5 to F1-8 and F2-5 to F2-8, the LED above the respective Channel button flashes to indicate the given configuration. With the four Channel buttons and these two configuration levels, you have up to eight different configuration options for Function 1 and eight options for Function 2. The actual number of possible assignments depends on the model of ENGL amp. Some of the sound-shaping and special functions of ENGL amps are assigned to the same S.A.C. command, e.g. Gain Boost & Hi Gain to F1-6. This has the advantage that you can control two sound-shaping functions in different main channels of the amp using one of the two Function buttons.

3. Selecting MIDI patches in MIDI mode

MIDI mode is active as soon as the Z-9 Foot Controller is powered externally via the mains socket (power supply) or by an ENGL amp via a 5-pin DIN cord. LEDs 1 to 5 act as a light chain to indicate MIDI mode is active, illuminating successively from left to right while LED 6 flashes. In this mode, you can access 10 MIDI patches in two banks using the Patch 1/6 to Patch 5/10 buttons. Press the Bank A/B button to switch between Banks A and B.

Examples:

To select MIDI patch 3:

-> Press Patch 3/8 briefly; the LED 3 above the button lights up;
MIDI Out sends MPN 3.

To select MIDI patch 7:

-> Press Bank A/B; LED 3 and LED 6 flash.

-> Press Patch 2/7 briefly; the two LEDs 2 and 6 light up;
MIDI Out sends MPN 7.

A tip from the designer:

If feasible, store your most frequently used MIDI presets on amps or effect devices in a single bank, that is, in MPNs 1 to 5. This lets you access your fave sounds swiftly without having to change banks.

Configuration table for the assignment of sound-shaping and special functions to Function 1 and Function 2

ENGL Special Edition Amp, E670:

Button	Functions E670	Setup	Indication	S.A.C.
Function 1	Master A/B	1: Channel 1	LED 1 lights	F1-1
Function 1	Modern/Classic	1: Channel 2	LED 2 lights	F1-2
Function 1	Half/Full Power	1: Channel 3	LED 3 lights	F1-3
Function 1	Speaker A/B	1: Channel 4	LED 4 lights	F1-4
Function 1	Tube Driver	1: Channel 1	LED 1 flashes	F1-5
Function 1	Gain Boost & Hi Gain	1: Channel 2	LED 2 flashes	F1-6
Function 1	Normal Bright & Contour	1: Channel 3	LED 3 flashes	F1-7
Function 1	Noise Gate	1: Channel 4	LED 4 flashes	F1-8
Function 2	Presence A/B	2: Channel 1	LED 1 lights	F2-1
Function 2	Depth Boost	2: Channel 2	LED 2 lights	F2-2
Function 2	Mega Lo Punch	2: Channel 3	LED 3 lights	F2-3
Function 2	Reverb	2: Channel 4	LED 4 lights	F2-4
Function 2	Tube Driver EQ	2: Channel 1	LED 1 flashes	F2-5
Function 2	Ultra Bright & Mid Edge	2: Channel 2	LED 2 flashes	F2-6
Function 2	FX Loop I / II	2: Channel 3	LED 3 flashes	F2-7
Function 2	Serial FX Loop	2: Channel 4	LED 4 flashes	F2-8

ENGL Preamp E570:

Button	Functions E570	Setup	Indication	S.A.C.
Function 1	no	1: Channel 1	LED 1 lights	F1-1
Function 1	Modern/Classic	1: Channel 2	LED 2 lights	F1-2
Function 1	no	1: Channel 3	LED 3 lights	F1-3
Function 1	no	1: Channel 4	LED 4 lights	F1-4
Function 1	Preamp Defeat	1: Channel 1	LED 1 flashes	F1-5
Function 1	Gain Boost & Hi Gain	1: Channel 2	LED 2 flashes	F1-6
Function 1	Normal Bright & Contour	1: Channel 3	LED 3 flashes	F1-7
Function 1	Noise Gate	1: Channel 4	LED 4 flashes	F1-8
Function 2	no	2: Channel 1	LED 1 lights	F2-1
Function 2	no	2: Channel 2	LED 2 lights	F2-2
Function 2	M.L.P. (Mega Lo Punch)	2: Channel 3	LED 3 lights	F2-3
Function 2	no	2: Channel 4	LED 4 lights	F2-4
Function 2	no	2: Channel 1	LED 1 flashes	F2-5
Function 2	Ultra Bright & Mid Edge	2: Channel 2	LED 2 flashes	F2-6
Function 2	no	2: Channel 3	LED 3 flashes	F2-7
Function 2	Stereo FX Loop	2: Channel 4	LED 4 flashes	F2-8

Comments:
Column 1 lists the Function button on the Z-9. Column 2 lists the sound-

shaping and special functions that can be assigned to it.

Column 2 lists sound-shaping and special functions on the ENGL E670 Amp and E570 Preamp. For other ENGL devices featuring S.A.C., consult the table in the device's operating manual.

Column 3 lists the configuration or setting required to remote control sound-shaping or special functions on the amp or preamp.
The first digit indicates the Function Setup routine, that is,
1: for Function 1 Setup and 2: for Function 2 Setup.
Channel 1 to Channel 4 denotes the button used to enter the setting.

Column 4 indicates the currently or newly selected configuration. For example, if LED 4 flashes in the Function 2 Setup routine, then the E670 Amp's Serial FX Loop or the E570 Preamp's Stereo FX Loop is currently assigned to Function 2, the respective S.A.C. command is F2-8.

Column 5 lists the shorthand designations for specific configurations that appear throughout the manual. For instance, the expression Function 1 equals F1-6 means that the Functions 1 button is configured to control Gain Boost & Hi Gain. On the other hand, Function 1 is not equal to F1-1 means Master A/B may not be assigned to the Function 1 button in the given use case.

Handling and Care:

Keep the footcontroller safe from hard knocks and shocks.

Avoid storing the footcontroller in damp or dusty rooms to spare jacks and switches.

Never use caustic or scouring detergents to clean the footcontroller's housing. Use a soft, damp cloth or sponge with diluted soapsuds or a standard brand of mild dishwashing liquid instead. Never use solvents they can dissolve the top panel labels.

Keep liquids well away from the footcontroller, particularly the interior of the housing.

Glossary

MIDI Programs:
In this manual, MIDI programs are called MPNs (MIDI program numbers) as well as MIDI patches. The terms are used interchangeably.
Though the MIDI standard defines program numbers 000 to 127 (0hex to 7Fhex), almost all MIDI devices indicate these programs using a 1-to-128 numbering scheme. The Z-9 Foot Controller selects the first 10 patches thereof (patch 1 to 10; that is, 000 to 009 or 0hex to 9hex according to the MIDI protocol).

MIDI Channel:
The MIDI standard defines 16 channels for sending and receiving MIDI data. The Z-9 Foot Controller sends MIDI program change commands via MIDI channel 1 (channel 00 or 0hex, according to the MIDI protocol).

MIDI Bank A and B:
The Z-9 offers two banks of five MIDI patches each for a total of 10 MPNs. The five MPNs in the active bank can be accessed directly at the push of a button

S.A.C.:
Short for Serial Amp Control, a proprietary ENGL data protocol that is understood by ENGL amps with an integrated S.A.C. interface. The great advantage of this remote control option is that a standard cord with stereo 1/4" jacks provides the link between the amp and Z-9.

Reciprocal trigger:
A/B switching by any other name: "Reciprocal trigger" means that pressing a button activates the newly selected function and simultaneously deactivates the previously active function. In other words, the button is configured as an A/B rather than an on/off switch.
In S.A.C. mode, the Z-9's first four buttons are configured as A/B switches to select channels (for example, Clean, Crunch or Lead) on ENGL amps. You can also configure Function 1 and Function 2 as A/B switches ("reciprocal triggered" with the four channel buttons) to extend your remote control options beyond mere channel switching.
Note: do not confuse A/B switching with Master A/B switching that can also be executed via the four channel buttons if the configuration in Function 1 Setup is set accordingly: in this case the switching process is a typical on/off function between Master A and Master B and it is executed by pressing the same button twice.

Function 1 Setup **and** Function 2 Setup:
These two configuration routines serve to assign an ENGL amp's sound-shaping or special functions to the two Function 1 and Function 2 buttons. They let you configure Function 1 and Function 2 to remote control amp features such as Bright, Presence A/B, and so forth.

Troubleshooting

None of the LEDs on the Z-9 light up after plugging in the power supply cord and the MIDI cable or stereo cord equipped with 1/4" jacks.
When powering the Z-9 via the MIDI cord:
-> Is your MIDI cord equipped with the required 5-pin connector?
-> Does it have the correct pin assignments (refer to page 18 for pin connections)?
-> Is the MIDI cord defective (say, a short circuit or broken wire)?
-> Is the power supply selector (phantom power) for the ENGL foot controller set properly on the ENGL amp (that is, to the ENGL MIDI Foot Controller position)?
-> Check cable connections: Is the foot controller's MIDI Out connected to the MIDI In on the ENGL amp?
-> When the Z-9 is powered via a MIDI cord, a 1/4" plug may not be inserted in the Serial Amp Control Out port, nor may a connector be plugged into the external power socket.
When powering the Z-9 via a stereo cord plugged into the S.A.C. Out:
-> Is the cord a stereo cord equipped with the required 3-terminal plugs?

-> Is the stereo cord defective (say, a short circuit or broken wire)?
Are its plugs' terminal assignments correct?

When powering the Z-9 via an external power unit:

-> Does the external power unit supply the required current and voltage? (refer to Technical Data on page 17).

-> Is the external power unit or cord defective?

-> Is there a loose connection in the cord's plug?
Does the plug fit snugly in the foot controller's socket?

-> When the Z-9 is powered via an external power unit, a 1/4" plug may not be inserted in the Serial Amp Control Out port.

The connected amp or effect device fails to respond to MIDI program change commands when you select an MPN on the Z-9.

-> Is the MIDI cord defective (say, a short circuit or broken wire) and does it have the correct pin assignments (refer to page 18 for pin connections)?

-> Check cable connections: Is the foot controller's MIDI Out connected to the MIDI In on the ENGL amp or effect device?

-> Is the amp or MIDI effect device set to MIDI channel 1?
To check this, you can set the amp (or effect device) to OMNI Receive mode. In this mode, MIDI data are received via all 16 channels.

-> Is the connected MIDI device able to switch to the selected MIDI patch?
The number of MIDI patches on the MIDI device may be limited (look this up in the MIDI device's operating manual).

-> Is your ENGL amp or ENGL MIDI peripheral device equipped with a display providing visual confirmation?
If not (as is the case with the E670 and Z-7), perhaps you have not programmed different settings (presets) to the MIDI patches. This may explain why there is no response when you select presets. Program presets with different settings and try again.

-> Is a plug inserted into the two-way footswitch jack of the ENGL device?
When you plug in a two-way footswitch, the channel switching option on the amp/preamp/poweramp is disabled, as are the S.A.C. and MIDI remote control options.
Choose one remote control option - S.A.C., MIDI **or** two-way footswitch. Do not combine these operating modes!

When operating the Z-9 in S.A.C mode, the connected ENGL amp does not respond when you press buttons to select channels or switch special functions.

-> Check the cord connecting the amp and Z-9 for a short circuit or broken wire.

-> Is the cord leading from the amp inserted in the right jack (S.A.C. Port)?

-> Try switching functions manually on the amp to see if it responds.

-> Is a plug inserted in the two-way footswitch jack at the amp?
Connecting a two-way footswitch disables the channel switching option, as well as the S.A.C. and MIDI remote control options.
Do not combine remote control options! Opt for S.A.C., MIDI **or** the two-way footswitch.

Technical data

Power supply:	external power unit: 7 to 14 volts AC or 9 to 20 volts DC, approx. 100 mA; or via a stereo cord with 1/4" jack plugs (5 Volts DC) connected to S.A.C. Port at specific ENGL Amp; or via MIDI cable (10 - 12 Volt AC) connected to a MIDI In port at an ENGL Amp providing phantom power;
Logic control system	
Processor, software:	AT89C52 with internal 8K Flash for source code EEPROM 93C46 for data storage.
S.A.C.:	Proprietary ENGL asynchronous data protocol. **CAUTION:** Connect the Z-9's S.A.C. Out only to the S.A.C. port of an ENGL amp!
MIDI interface:	Asynchronous data protocol compliant with the MIDI standard;
Basic channels:	Channel 1 (0hx) in accordance with the MIDI specification;
Program change:	Program numbers 1 to 10 (0hx - 9hx) in accordance with the MIDI specification; the 10 MPN's are organized in two banks A and B;
Dimensions:	Length: 500 mm, depth: 120 mm, overall height with buttons: approx. 50 mm
Weight:	approx. 1.8 kg

Note: Technical specifications are subject to change without notice.

MIDI Out, DIN connector

page: 8

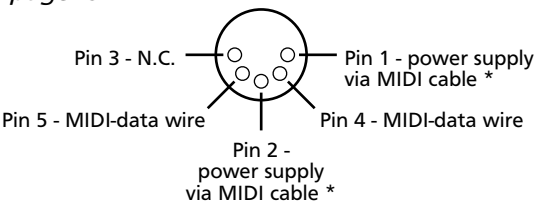

*: Power supply from ENGL devices that are equipped with a MIDI IN port.
The corresponding configuration switch at the amp must be set to the position *ENGL MIDI Footcontroller*.

Serial Amp Control (S.A.C.) Out

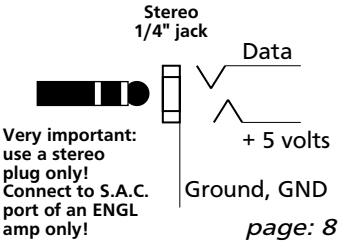

Control Panel Layout

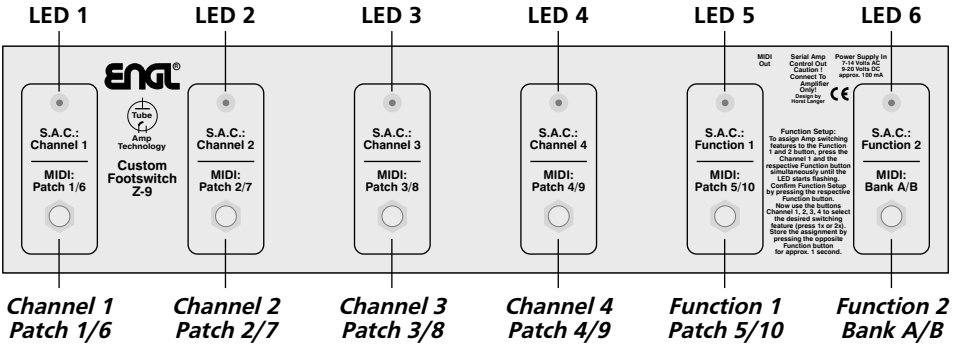

Connections on the rear panel

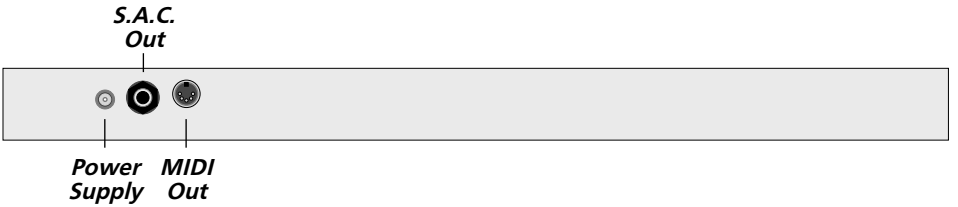

Notes / Notizen

ENGL®

www.engl-amps.com