City of Hart, Michigan
CITY COUNCIL AGENDA
August 9, 2022, 7:30 PM
407 State St. – Council Chamber
NOTICE OF PUBLIC MEETING
REGULAR COUNCIL MEETING

1. Call to Order
2. Roll Call – Burillo, Evans, Hodges, Klotz, Rybarz Jr., Trygstad, Platt
3. Pledge of Allegiance
4. Approval of Agenda
5. Public Comments – **Public comment on any matter that is not included on the agenda for a public hearing by the Council. We ask that you please limit your comments to 3 minutes**
    a. Correspondence, Events, Presentations
        i. Safe Routes to School (SRTS) project presentation – Don DeVries and Rick Stout, Fleis and Vandenbrink
6. Consent Agenda:
    a. Approval of Minutes from July 26, 2022 Council meeting.
    b. Bills, Claims, Payroll
    c. Reports of Boards, Commissions, and Committees
    d. Department Reports – Police/BioPure/Public Works/Energy/C&E Dvlp.
7. Action Items
    a. Resolution 2022-31 Authorize Safe Routes To School (SRTS) Funding
    b. Resolution 2022-32 Accept Department of Natural Resources Grant Award
    c. Resolution 2022-33 Accept competitive quotes for leaf vacuum and award purchase
    d. Resolution 2022-34 Tentative award of construction contract for wastewater system improvements – Griswold Gravity Sewer
    e. Resolution 2022-35 Tentative award of construction contract for wastewater system improvements – Riverside and Griswold Lift Station
    f. Resolution 2022-36 Tentative award of construction contract for wastewater system improvements – Storage Lagoon / Rapid Infiltration Basin Repair
8. Discussion Items
    a. Timing of city council meetings
9. City Manager Report
10. Communications from the Mayor and Council (Including board and committee updates.)
    a. Appoint City of Hart Fire Board representative – John Williams
11. Adjournment –

Access is provided through the Michigan Relay Service for individuals with speech or hearing impairments. https://hamiltonrelay.com/michigan/index.html

With advance notice of seven calendar days, the City will provide interpreter services at all public meetings, including language translation and signage for the hearing impaired. Call 231-873-2488. La Ciudad proporcionará servicio de intérprete para esta reunión pública si se pide con siete días de anticipación, lo cual incluye la traducción de idioma y letreros para los con una discapacidad auditiva. Llame al 231-873-2488.

CITY OF HART
407 S. STATE ST.
HART, MI 49420
COUNCIL PROCEEDINGS
July 26th 2022
MINUTES – Draft

PRESENT: Mayor Vicki Platt, Councilors: Jim Evans, Dean Hodges, Amanda Klotz, and Kris Trygstad
ABSENT: Catalina Burillo, and Fred Rybarz
OTHERS PRESENT: City Manager – Rob Splane, City Clerk – Karla Swihart, BioPure Superintendent – Paul Cutter, DPW Superintendent – Brad Whitney, Police Chief – Juan Salazar, Gail Zieger, Sharon Hallack, and George Sadler,

Mayor Platt called the meeting to order; following the roll call, the mayor led the Council in the pledge of allegiance.

APPROVAL OF AGENDA:

- Amended agenda to remove and rescind, 5a) correspondence, Events, Presentations: i) Letter from Fred Rybarz – Council Resignation and ii) Mayoral Recognition: Fred Rybarz for outstanding service to the community. Fred has rescinded his resignation letter and will remain on the Hart City Council
    - Klotz motioned to approve the amended agenda and was supported by D. Hodges
        - Ayes: 5 Nays: 0 Absent: 2

PUBLIC COMMENTS:

- Gail Zieger – 27 South State Street Hart, while working next door at lakeside fitness looking out the windows where we are going to hang a flowerpot saying look how beautiful it would be against the trees and was told that the trees are going to be removed. I have a really hard time with that. The reason I am having such a hard time is when we moved here 7 years ago and we were attracted to downtown area because of the trees, People are drawn to the green, and you should really think about this before you take the trees down, the equilogical end of this is the oxygen from the trees, they draw birds along with butterflies.
- Paul Cutter – 3209 N 140th Ave Hart, Let's take a moment of silence to remember Clancy Aerts.
- George Sadler – Po Box 611, 211 E Main, 216 E Main, requesting that the City Manager and Mayor do some investigating as I have been approached by the Sheriff's department (the Sheriff himself) that somebody made a complaint representing themselves as the City of Hart, he said it was done anonymously, but then he said it wasn't anonymously as he knows who it is but cannot reveal who it is, so somebody on this board has a heartache with me and if the City Mayor or City Manager don't know anything about it how can they represent themselves as an official of Hart and make a complaint. I had a liquor license inspection because of this complaint and at some point, somebody has to step up and say that they did this and inform the Sheriff that it didn't happen. So, I am asking for help from the City Mayor or Manager, if anyone has a heartache let me know that is all I am asking.
  Second, Excellent job done on the parking lot over at the Ceres Solutions, the spot that was open was covered up and the weeds have all been cut down. I am hoping that something can be done with the City owned property behind my bar, there are animals with babies living out there and there are a lot of kids that play down there. A few years ago, former City Manager said the weeds would all get sprayed and would get cleaned up down there but so far there has been nothing done. So I'm hoping that we can get this taken care of soon.

CORRESPONDENCE, EVENTS, PRESENTATIONS: None

CONSENT AGENDA:

- Approval of minutes from July 12th, 2022.
- Bills, Claims, Payroll
- Reports of Boards, Commissions, and Committees
- Department Reports – Police/BioPure/Public Works/Energy/C&E Dvlp
    - A. Klotz motioned to approve Consent Agenda and supported by D. Hodges
        - Ayes: 5 Nays: 0 Absent: 2

ACTION ITEMS:

- Resolution 2022-29 – Accept and Approve S&P Global proposal to provide credit assessment.
  WHEREAS, the City of Hart has adopted a capital improvement plan to invest in Water and Wastewater infrastructure; and
  WHEREAS, City Council has committed to apply for State of Michigan State Revolving Funds to finance to finance planned infrastructure investments; and
  WHEREAS, the City is required to pursue a credit assessment prior to seeking public and/or private funding; and
  WHEREAS, the City of Hart's legal bonding council and financial advisor have engages S&P Global Ratings to provide said assessment; and
  WHEREAS, to secure the benefits of efficient self-government and to promote and protect our common interests and welfare, the City Council hereby declares:
  NOW THEREFORE BE IT RESOLVED THAT THE CITY COUNCIL:
  Accepts and approves engaging S&P Global Ratings to provide a confidential credit Assessment as required by the State and Federal Government for the sum of $16,500 plus, all applicable value-added, sale, use and similar taxes
  Authorizes the City Manager to sign and execute all related documents on behalf of the City of Hart
  - J. Evans motioned to approve Resolution 2022-29 Approve S&P Global proposal to provide credit assessment and supported by K. Trygstad
    - Ayes: 5 Nays: 0 Absent: 2
- Resolution 2022-30 – Authorize Appointed City Official Pay Rate
  WHEREAS, the City recognizes that highly trained, dedicated staff is necessary to conduct City operations with minimal staff; and
  WHEREAS, per the City Charter, City Council sets appointed officials pay rates; and
  WHEREAS, to secure the benefits of efficient self-government and to promote and protect our common interests and welfare, the City Council hereby declares:
  NOW THEREFORE BE IT RESOLVED THAT THE CITY COUNCIL
  Authorizes and approves the following appointed officials pay rates to be and effective as of July 1, 2022, with a one-time retroactive payment:
  City Clerk/ Treasurer: $59,899 ($53,500 current)
  City of Hart Police Chief: $75,363 ($67,288 Current)
  City of Hart City Manager $90,434 ($87,800 Current)
  - A. Klotz motioned to approve Resolution 2022-30, Authorize appointed City official pay rate, and supported by K. Trygstad
    - Ayes: 5 Nays: 0 Absent: 2

DISCUSSION ITEMS: None

CITY MANAGER'S REPORT:

- Brickley Delong to begin City of Hart pre-audit Monday
- To reduce waste, most municipalities in Michigan either have previously or are working to reduce the amount of paper used in City Hall. To provide the utmost level of transparency, if any citizen of Hart requires a print copy of council packet, one will be provided upon request.
- Competitive pricing is pending for City Planning Services, with a council decision likely to be made in August. Competitive pricing of this work was last sought in 2003.
- The City Manager attended the Michigan Municipal Executives summer workshop last week. Among several useful sessions and peer networking, highlights include:
  A Municipal bonding workshop was filled with useful knowledge at a time where the City is actively seeking funding for clean drinking and wastewater infrastructure projects.
  An introduction to a new State of Michigan program run by the Michigan Infrastructure Council. The Asset Management Champion Program seeks to establish a network of leaders that will help strengthen best practices in asset management. The City Manager has applied for and been accepted to the Asset Management Champion program. The benefit to the City of Hart is that as the City plans infrastructure projects, they can add these projects to a state list. As different entities such as neighboring communities,

along with county and state level entities plan for projects, they can combine projects resulting in a reduction in overall cost. The estimated savings on this collaboration can reach up to 30%.

- This past Friday, The Certified Public Manager class at Saginaw Valley state University focused on Human Resources. Lots of notes were taken that will help to streamline HR processes in Hart. The program will conclude this winter with a capstone project to be presented to City Council.
- New Utility bill format is ready and will be deployed this coming billing cycle. The new format includes a 13-month utility usage chart, a highlighted announcements area, and enhanced transparency in the bill details.
- Clancy Aerts raised in Hart, Michigan, and resident for almost 50 years passed away this past Friday. His service to the City of Hart and Oceana County consisted of many years on Hart City Council, two terms as Mayor, dedicated work on the Hart Area Fire Board and over 25 years on the Oceana County Fair Board with 17 of them as president. Visitation is Wednesday with funeral services following on Thursday morning. The City should consider some form of honoring Clancy's level of commitment to the City of Hart and surrounding communities.

COMMUNICATIONS FROM THE MAYOR AND COUNCIL:

- Mayor Platt asked about the current RFPs that are on the City's website if have been any responses? City Manger said there have been some for the wayfinding signage, and one for the demolition of 227 E Main St. They are still open so still time left for bids to come in.
  Mayor Platt also commented looks like the old funeral home that burnt is being cleaned up. Hopes that it is not going to be tore down.
- J. Evans suggested that the packets be available in Spanish and to make sure that is noted on the City's website. Also is it possible to change the starting time for the Council meetings? In talking with a few people 7:30 is late to start a meeting.
  Regarding Clancy, maybe a plaque in honor of his services provided to the City of Hart all these years.
  Also I wanted to state I voted in favor of the pay raises as I do not want to deny our fine civic employees a justified pay raise, I don't think it was enough, also feel there should be retention policy with a retention bonus.

ADJOURN:

- There being no further business to come before the Council, the meeting adjourned at upon a motion by A. Klotz and supported by K. Trygstad. The next regularly scheduled meeting will be on August 9th, 2022, at 7:30 pm.

Respectfully Submitted

Karla Swihart

Karla Swihart, City Clerk

Payables Date: 08/09/2022	Description	Total	General +	DPW	Energy	BPTF	Water
Adams, Matt	Phone Reimbursement	$ 35.00		$ 35.00			
APX/Mirecs	Mirecs	$ 25.26			$ 25.26		
Ball, Bobbie	Deposit Refund	$ 183.16			$ 183.16		
Baxer, Laura	MOC 8/18/22	$ 500.00	$ 500.00				
Bell Equipment	Street Sweeper Lease Pmt	$ 5,800.00		$ 5,800.00			
Cannon/Eaton	Yukon Annual Server Fees	$ 16,196.00			$ 8,098.00		$ 8,098.00
City of Hart	Utilities	$ 51,137.59	$ 4,881.85	$ 1,101.06	$ 2,070.83	$ 39,524.87	$ 3,558.98
Cummins	Liftstation Maintenance - Polk Rd.	$ 1,295.30					$ 1,295.30
Cummins	Liftstation Maintenance - Hart Portable	$ 1,292.48					$ 1,292.48
Dacott	Power Purchase Report	$ 650.00			$ 650.00		
Darling, Kelsey	Deposit Refund	$ 61.91			$ 61.91		
Drew Hale Music	MOC 8/11/22	$ 750.00	$ 750.00				
Eisenlohr, Mike	Phone Reimbursement	$ 35.00		$ 35.00			
First Net	Police Modems	$ 88.46	$ 88.46				
Freed Mgmt	#8 JGP Mgrs	$ 3,570.00	$ 3,570.00				
Frontier	Diesel Plant	$ 97.91			$ 97.91		
GRA Benefits Group	Navigator Benefit Program	$ 600.00	$ 150.00		$ 150.00	$ 150.00	$ 150.00
Hart Cemetery Commission	Summer Taxes 2022	$ 1,528.41	$ 1,528.41				
Hart Heritage District	Concert Sponsorship	$ 250.00	$ 250.00				
HydroCorp	Cross Connection Control Program	$ 707.00					$ 707.00
Ingalls, Joe	Phone Reimbursement	$ 35.00	$ 35.00				
Jack Doheny	Credit Memo	$ (483.00)					$ (483.00)
JR Accounting	Accounting Assistance	$ 270.00	$ 270.00				
Kies, Chris	Phone Reimbursement	$ 35.00				$ 35.00	
LARA	LIEAF Program	$ 980.98			$ 980.98		
Lighthouse Car Care	Police/Energy Dept	$ 198.00	$ 46.00		$ 152.00		
Magrath, Richard	MOC 8/25/22	$ 200.00	$ 200.00				
Mantyck, Elizabeth	Phone Reimbursement	$ 35.00	$ 35.00				
Mika Meyers	Legal Services	$ 4,133.00	$ 4,133.00				
Model	Rugs/Rags/Uniforms	$ 445.24		$ 150.88	$ 63.88	$ 230.48	
Model First Aid	First Aid Supplies	$ 266.70			$ 266.70		
Model First Aid	First Aid Supplies	$ 62.99		$ 62.99			
Model First Aid	Eye Wash Station Servicing	$ 194.85			$ 129.90	$ 64.95	
Moore, Andrew	Phone Reimbursement	$ 35.00	$ 35.00				
MPPA	Purchased Power	$ 55,637.00			$ 55,637.00		
MPPA	Purchased Power	$ 62,479.21			$ 62,479.21		
Munetrix	Transparency License	$ 2,709.00	$ 677.25		$ 677.25	$ 677.25	$ 677.25
Nutrien Ag Solutions	Fertilizer, chemicals	$ 656.10					$ 656.10
Oceana Rentals	Deposit Refund	$ 151.98			$ 151.98		
Pixel Grafix Studio	Envelopes	$ 700.45	$ 700.45				
Power Line Supply	Parts/Supplies	$ 167.32			$ 167.32		
Power Line Supply	Parts/Supplies	$ 32.68			$ 32.68		
Power Line Supply	Parts/Supplies	$ 338.08			$ 338.08		
Power Line Supply	Parts/Supplies	$ 76.88			$ 76.88		
Power Line Supply	Parts/Supplies	$ 375.00			$ 375.00		
Power Line Supply	Parts/Supplies	$ 1,521.48			$ 1,521.48		
Pranger Property Mgmt	CH/CC/Commons Cleaning Svcs	$ 236.00	$ 236.00				
Pranger Property Mgmt	CH/CC/Commons Cleaning Svcs	$ 203.00	$ 203.00				
Republic Services	Starting Block 1/overage	$ 274.47			$ 274.47		
Ricoh	Copier Overage Fees	$ 77.80	$ 77.80				
Riggs, Jason	Phone Reimbursement	$ 35.00		$ 35.00			
Ryder, Ray	Phone Reimbursement	$ 35.00	$ 35.00				
Salazar, Juan	Phone Reimbursement	$ 35.00	$ 35.00				
Schiller, Mike	Phone Reimbursement	$ 35.00			$ 35.00		
Schmieding, Kevin	Phone Reimbursement	$ 35.00			$ 35.00		
Skipski, Kevin	Phone Reimbursement	$ 35.00	$ 35.00				
Splane, Rob	Car Allowance/Phone Reiumbursement	$ 335.00	$ 335.00				
Spring Brook	Parts/Supplies	$ 644.49				$ 644.49	
Stoneman, Thomas	Phone Reimbursement	$ 35.00				$ 35.00	
SyncWave	Internet Hosting	$ 468.14	$ 107.66	$ 84.27	$ 84.27	$ 191.94	
Tanner Plumbing & Heating	Parts/Supplies	$ 244.73				$ 244.73	
Trace Analytical	Water Testing	$ 108.00				$ 108.00	
Tri-Berry	Fabricated parts for Svc Truck	$ 4,946.00				$ 4,946.00	
Trudell, Amy	Deposit Refund	$ 6.08			$ 6.08		
TruGreen	Lawn Service @ CH	$ 47.69	$ 47.69				
VanAgtmael, Scott	Phone Reimbursement	$ 35.00			$ 35.00		

--OVER--

Payables Date: 08/09/2022	Description	Total	General +	DPW	Energy	BPTF	Water
VanZoeren, Andy	Phone Reimbursement	$ 35.00			$ 35.00		
Whitney, Brad	Reimburse Election Expense	$ 14.40	$ 14.40				
Whitney, Devin	Phone Reimbursement	$ 35.00			$ 35.00		
Windridge	Work T-Shirts	$ 336.00		$ 336.00			
		$ -					
		$ -					
		$ -					
		$ -					
		$ -					
		$ -					
		$ -					
		$ -					
		$ -					
		$ -					
		$ -					
		$ -					
		$ -					
	Subtotal	$ 224,349.22	$ 18,976.97	$ 7,640.20	$ 134,927.23	$ 46,852.71	$ 15,952.11
HAND CHECKS/ACH/EFT							
Alerus	City Share 401 Retirement	$ 4,100.12	$ 4,100.12				
US Postmaster	Postage	$ 445.32			$ 289.46	$ 133.60	$ 22.26
Schmieding, Kevin	Reimburse Training Expenses	$ 250.00	$ 250.00				
Guardian	Insurance Premium	$ -					
Delta Dental	Insurance Premium	$ -					
United Group	Insurance Premium	$ -					
Blue Cross Blue Shield	Insurance Premium	$ -					
	TOTAL HAND CHECKS	$ 4,795.44	$ 4,350.12	$ -	$ 289.46	$ 133.60	$ 22.26
	Sub-Total Regular Bills/Hand Checks	*$ 229,144.66*	*$ 23,327.09*	*$ 7,640.20*	*$ 135,216.69*	*$ 46,986.31*	*$ 15,974.37*
Gross Payroll	542						
	Sub-Total	$ -					
	GRAND TOTAL	*$ 229,144.66*	$ 23,327.09	$ 7,640.20	$ 135,216.69	$ 46,986.31	$ 15,974.37

City of Hart Police Department

407 State Street Ph. (231)873-2488 Fax (231)873-0100 Hart, MI 49420-1259

Juan Salazar, Chief

TO: City of Hart Mayor, City Council, and City Manager
FROM: Juan Salazar, Chief of Police
DATE: August 9th, 2022

RECENT EVENTS

From Thursday, July 21st, 2022, through Wednesday, August 3rd, 2022, the Hart Police Department received 94 Complaints ranging from Suspicious Situations, Assist to Other Agencies, Threats Complaints, Larcenies, Well-Being Checks, Breaking & Entering, Medical Assists, Property Damage Crashes, Warrant Arrests, Motorist Assists, Unwanted Persons, Alarms and Domestic Assault.

On Thursday, July 21st, 2022, the Hart Police Department was dispatched to the 400 block of Wood Street referencing a Retail Fraud. A 19-year-old Hart woman, an 18-year-old Hart man and a 14-year-old Hart boy, had stolen beverages and cigar wrappers from a local business. The boy was turned over to his parents without incident. A report was submitted to the Oceana County Prosecutor's Office for his review. The Oceana County Prosecutor's Office authorized a summons for the woman and man and a petition for the boy referencing this complaint.

On Friday, July 22nd, 2022, the Hart Police Department was dispatched to the 400 block of Wood Street regarding a Breaking & Entering. A West entry/exit door was damaged, and entry was made into a local business. A case containing vape products and single-wrapped vape products were taken from the store. The suspects left on foot, running East on Wood Street and turning and running South on Union Street. An investigation is ongoing.

On Monday, July 26th, 2022, the Hart Police Department began a joint investigation with Oceana County Child Protective Services referencing a Child Abuse complaint that occurred on Friday, July 22nd, 2022. A 2-month-old child had fractured his arm, leg and rib. It was reported the child had fallen from a bed. An investigation is ongoing.

On Monday, July 29th, 2022, the Hart Police Department was dispatched to the 400 block of Church Street about an Assault & Battery / Child Abuse complaint. A 12-yar-old boy and a 40-year-old Hart woman, the mother of the boy, were in a physical altercation on Wednesday, July 27th, 2022, within the City of Hart. The boy is reported to have punched the woman in the face and kicked the woman in the leg. The woman is reported to have choked the boy. A joint investigation with Oceana County Child Protective Services is ongoing.

On Sunday, July 31st, 2022, the Hart Police Department was dispatched to the 700 block of East Main Street regarding a 68-year-old female who was located unresponsive and lifesaving efforts were being taken. Officers arrived on the scene and continued lifesaving efforts and CPR until LIFE EMS arrived. Unfortunately, LIFE EMS pronounced the woman deceased.

On Monday, August 1st, 2022, the Hart Police Department was dispatched to the 500 block of East Main Street referencing a Domestic Assault. A 25-year-old Hart man claims to have been assaulted, shoved and received a laceration to his right arm from a 62-year-old Hart woman. Additionally, the woman claims to have been choked by the man during this incident. A report will be submitted to the Oceana County Prosecutor's Office for his review.

On Monday, August 1st, 2022, the Hart Police Department was dispatched to the 400 block of Wood Street regarding a Retail Fraud. Three (3) bottles of wine had been taken/stolen from a local business totally over $200.00. The suspect is unknown at this time. An investigation is ongoing.

Beverly Leimback, retired Hart Police Department Chief of Police Daniel Leimback's wife, passed away unexpectedly this past weekend. Chief Leimback dedicated over forty (40) years of service to the citizens and visitors of the City of Hart. Chief Leimback paved the way for this department during these years, and the department would not be what it is today without his dedication to this community. I wanted to extend my most sincerities condolences to the Leimback family and wish them comfort during this difficult time.

Respectfully,

J. Salazar,
Chief of Police

RESOLUTION 2022 - 31
City Council
City of Hart, Michigan
Oceana County

Approval of potential Safe Routes to School grant participation and funding confirmation

WHEREAS, the Safe Routes to School program is a federally funded program administered in Michigan by the Michigan Department of Transportation (MDOT); and

WHEREAS, the City of Hart in partnership with Hart Public Schools, the Pentwater-Hart Trail Committee and the Oceana County Road Commission, is applying for funds through MDOT from the Safe Routes to School program to construct certain infrastructure projects throughout the City, including multifunctional pedestrian/bicycling pathways and sidewalk, crossing, and signage to enable and encourage children to safely walk and bike to school; and

WHEREAS, MDOT requires a formal commitment from the public agency that will be receiving these funds and will be implementing and maintaining these infrastructure projects.

NOW, THEREFORE, NOW THEREFORE BE IT RESOLVED THAT THE CITY COUNCIL

> *Authorizes Robert Splane, City Manager and Act 51 Street Administrator, to act as agent on behalf of the City seeking Safe Routes to School funding, to act as the applicant's agent during project development, and to sign a project agreement upon receipt of a funding award: and*
>
> *The City attests to the existence of, and commits to, providing in collaboration with the Pentwater-Hart Trail Committee and Oceana County the funds necessary to carry out the project ($25,000 from the City of Hart, $440,000 in proposed grant funding and $280,000 from the Pentwater-Hart Trail Committee funds), including engineering design and construction, permit fees, administration costs, cost overruns; and*
>
> *The City commits to owning, operating, funding, and implementing a maintenance program over the design life of the facilities constructed with Safe Rotes to School funding.*

Moved by _____, supported by _____, and thereafter adopted by the Hart City Council at a regularly scheduled meeting held on August 9, 2022.

RESOLUTION 2022 - 32
City Council
City of Hart, Michigan
Oceana County

Accept Department of Natural Resources Grant Award

WHEREAS, The City of Hart owns and maintains several parks for community recreation; and

WHEREAS, In 2017, the City of Hart acquired property adjacent to Veterans Memorial Park for the purpose of expanding the park and adding additional amenities; and

WHEREAS, In 2019, the City of Hart applied for a Department of Natural Resources Trust Fund Grant in the amount of $300,000 which was subsequently awarded in 2020.

NOW, THEREFORE, NOW THEREFORE BE IT RESOLVED THAT THE CITY COUNCIL

Does hereby accept the terms of the Agreement for Veteran's Memorial Park improvements project number TF20-0134 as received from the Michigan Department of Natural Resources Trust Fund, and that the City of Hart does hereby specifically agree, but not by way of limitation, as follows:

1. To appropriate all funds necessary to complete the project during the project period and to provide six hundred and ninety-four thousand ($694,000) dollars to match the grant authorized by the DNR Trust Fund.
2. To maintain satisfactory financial accounts, documents, and records to make them available to the DNR Trust Fund for auditing at reasonable times.
3. To construct the project and provide such funds, services and materials as may be necessary to satisfy the terms of said Agreement.
4. To regulate the use of the facility constructed and reserved under this Agreement to assure the use thereof by the public on equal and reasonable terms.
5. To comply with any and all terms of said Agreement including all terms not specifically set forth in the foregoing portions of this Resolution."

Moved by _____, supported by _____, and thereafter adopted by the Hart City Council at a regularly scheduled meeting held on August 9, 2022.

Michigan Department of Natural Resources - Grants Management

Michigan Natural Resources Trust Fund

Development Project Agreement

This information is required by authority of Part 5 of Act 451, P.A. 1994 as amended, to receive funds.

This Agreement is between **City of Hart** in the county of **Oceana County**, hereinafter referred to as the "GRANTEE," and the MICHIGAN DEPARTMENT OF NATURAL RESOURCES, an agency of the State of Michigan, hereinafter referred to as the "DEPARTMENT." The DEPARTMENT has authority to issue grants to local units of government for the development of public outdoor recreation facilities under Part 19 of the Natural Resources and Environmental Protection Act, P.A. 451 of 1994, as amended and under Article IX, Section 35 of the Michigan Constitution. The GRANTEE has been approved by the Michigan Natural Resources Trust Fund (MNRTF) Board of Trustees (BOARD) to receive a grant. In Public Act **9 of 2021**, the Legislature appropriated funds from the MNRTF to the DEPARTMENT for a grant-in-aid to the GRANTEE.

The purpose of this Agreement is to provide funding in exchange for completion of the project named below . This Agreement is subject to the terms and conditions specified herein.

Project Title: Veteran's Memorial Park Project #: TF20-0134

Grant Amount: $300,000.00 31% PROJECT TOTAL: $994,000.00

Match Amount: $694,000.00 69%

Start Date: Date of Execution by DEPARTMENT End Date: 05/31/2023

As a precondition to the effectiveness of the Agreement, the GRANTEE is required to sign the Agreement and return it to the DEPARTMENT with the required attachments by 07/06/2021 or the Agreement may be cancelled by the DEPARTMENT. **This Agreement is not effective until the GRANTEE has signed it, returned it, and the DEPARTMENT has signed it.** The Agreement is considered executed when signed by the DEPARTMENT.

The individuals signing below certify by their signatures that they are authorized to sign this Agreement on behalf of their agencies , and that the parties will fulfill the terms of this Agreement, including any attached appendices, as set forth herein.

GRANTEE

SIGNED _____

By [Print Name]: _____

Title: _____

Organization: _____

_____

DUNS Number

_____ _____

SIGMA Vendor Number SIGMA Address ID

MICHIGAN DEPARTMENT OF NATURAL RESOURCES

SIGNED _____

By: _____

Grants Section Manager

_____

Date of Execution by DEPARTMENT

1. This Agreement shall be administered on behalf of the DEPARTMENT by the Grants Management Section within the Finance and Operations Division. All notices, reports, documents, requests, actions or other communications required between the DEPARTMENT and the GRANTEE shall be submitted through the department's online grant management system, MiRecGrants, which is accessed through www.michigan.gov/dnr-grants, unless otherwise instructed by the DEPARTMENT. Primary points of contact pertaining to this agreement shall be:

GRANTEE CONTACT	DEPARTMENT CONTACT
	MNRTF Grant Program Manager
Name/Title	Name/Title
	Grants Management/DNR Finance & Operations
Organization	Organization
	525 W. Allegan Street, Lansing, MI 48933
Address	Address
	P.O. Box 30425, Lansing, MI 48909
Address	Address
	517-284-7268
Telephone Number	Telephone Number
	DNR-Grants@michigan.gov
E-mail Address	E-mail Address

2. The legal description of the project area, boundary map of the project area, and the development grant application bearing the number **TF20-0134** uploaded to MiRecGrants are by this reference made part of this Agreement. The Agreement together with the referenced documents in MiRecGrants constitute the entire Agreement between the parties and may be modified only in writing and executed in the same manner as the Agreement is executed.

3. The time period allowed for project completion is from **05/07/2021** through **05/31/2023**, hereinafter referred to as the "project period." Requests by the GRANTEE to extend the project period shall be submitted in MiRecGrants before the expiration of the project period. Extensions to the project period are at the discretion of the DEPARTMENT and may only be extended by an amendment to this Agreement.

4. The words "project area" shall mean the land and area described in the uploaded legal description and shown on the uploaded boundary map.

5. The words "project facilities" shall mean the following individual components, as further described in the application.

Access Pathway 5' - 6' wide
Bench(es)
Bike Rack(s)
Boardwalk
Canoe/Kayak Launch or Ramp
Fence
Landscaping
Lighting
Paved Parking Lot
Picnic Table(s)
Recycle Bin(s)
Restroom Building
Shelter

Signage
Stone Stairs
Trash Bin(s)
Utilities

6. The DEPARTMENT will:

   a. grant to the GRANTEE a sum of money equal to **Thirty-One percent (31%)** of **Nine Hundred and Ninety-Four Thousand dollars ($994,000.00),** which is the total eligible cost of construction of the project facilities including engineering costs, but in any event not to exceed **Three Hundred Thousand dollars ($300,000.00).**
   b. grant these funds in the form of reimbursements to the GRANTEE for eligible costs and expenses incurred as follows:

      i. Payments will be made on a reimbursement basis at **Thirty-One percent (31%)** of the eligible expenses incurred by the GRANTEE up to 90% of the maximum reimbursement allowable under the grant.
      ii. Reimbursement will be made only upon DEPARTMENT review and approval of a complete reimbursement request submitted by the GRANTEE through the MiRecGrants website, including but not limited to copies of invoices, cancelled checks, EFTs, list of volunteer and/or force account time and attendance records.
      iii. The DEPARTMENT shall conduct an audit of the project's financial records upon approval of the final reimbursement request by DEPARTMENT staff. The DEPARTMENT may issue an audit report with no deductions or may find some costs ineligible for reimbursement.
      iv. The final 10% of the grant amount will be released upon completion of a satisfactory audit by the DEPARTMENT and documentation that the GRANTEE has erected an MNRTF sign in compliance with Section 7(j) of this Agreement.

7. The GRANTEE will:

   a. immediately make available all funds needed to incur all necessary costs required to complete the project and to provide **Six Hundred and Ninety-Four Thousand dollars ($694,000.00)** in local match. This sum represents **Sixty-Nine percent (69%)** of the total eligible cost of construction including engineering costs. Any cost overruns incurred to complete the project facilities called for by this Agreement shall be the sole responsibility of the GRANTEE.
   b. with the exception of engineering costs as provided for in Section 8, incur no costs toward completion of the project facilities before execution of this Agreement and before DEPARTMENT approval of plans, specifications and bid documents.
   c. complete construction of the project facilities to the satisfaction of the DEPARTMENT and to comply with the development project procedures set forth by the DEPARTMENT in completion of the project, including but not limited to the following:

      i. Retain the services of a professional architect, landscape architect, or engineer, registered in the State of Michigan to serve as the GRANTEE'S Prime Professional. The Prime Professional shall prepare the plans, specifications and bid documents for the project and oversee project construction.
      ii. **Within 180 days** following execution of this Agreement by the GRANTEE and the DEPARTMENT and before soliciting bids or quotes or incurring costs other than costs associated with the development of plans, specifications, or bid documents, provide the DEPARTMENT with plans, specifications, and bid documents for the project facilities, sealed by the GRANTEE'S Prime Professional.
      iii. Upon DEPARTMENT approval of plans, specifications and bid documents, openly advertise and seek written bids for contracts for purchases or services with a value equal to or greater than $50,000 and accept the lowest qualified bid as determined by the GRANTEE'S Prime Professional.
      iv. Upon DEPARTMENT approval of plans, specifications and bid documents, solicit three (3) written quotes for contracts for purchases or services between $5,000 and $50,000 and accept the lowest qualified bid as determined by the GRANTEE'S Prime Professional.
      v. Maintain detailed written records of the contracting processes used and submit these records to the DEPARTMENT upon request.
      vi. Complete construction to all applicable local, state and federal codes, as amended; including but not limited to the federal Americans with Disabilities Act (ADA) of 2010, as amended; the Persons with Disabilities Civil Rights Act, Act 220 of 1976, as amended; the Playground Equipment Safety Act, P.A. 16 of 1997, as amended; the Utilization of Public Facilities by Physically Limited Act, P.A. 1 of 1966, as

amended; the Elliott-Larsen Civil Rights Act, Act 453 of 1976, as amended; and the 2013 Access Board's Final Guidelines for Outdoor Developed Areas.

vii. Bury all new utilities within the project area.

viii. Correct any deficiencies discovered at the final inspection within 90 days of written notification by the DEPARTMENT. These corrections shall be made at the GRANTEE'S expense and are eligible for reimbursement at the discretion of the DEPARTMENT and only to the degree that the GRANTEE'S prior expenditures made toward completion of the project are less than the grant amount allowed under this Agreement.

d. operate the project facilities for a minimum of their useful life as determined by the DEPARTMENT, to regulate the use thereof to the satisfaction of the DEPARTMENT, and to appropriate such monies and/or provide such services as shall be necessary to provide such adequate maintenance.

e. provide to the DEPARTMENT for approval, a complete tariff schedule containing all charges to be assessed against the public utilizing the project area and/or any of the facilities constructed thereon, and to provide to the DEPARTMENT for approval, all amendments thereto before the effective date of such amendments. Preferential membership or annual permit systems are prohibited on grant-assisted sites, except to the extent that differences in admission and other fees may be instituted on the basis of residence. Nonresident fees shall not exceed twice that charged residents. If no resident fees are charged, nonresident fees may not exceed the rate charged residents at other comparable state and local public recreation facilities.

f. adopt such ordinances and/or resolutions necessary to effectuate the provisions of this Agreement; certified copies of all such ordinances and/or resolutions adopted for such purposes shall be forwarded to the DEPARTMENT before the effective date thereof.

g. separately account for any revenues received from the project area which exceed the demonstrated operating costs and to reserve such surplus revenues for the future maintenance and/or expansion of the GRANTEE'S park and outdoor recreation program.

h. furnish the DEPARTMENT, upon request, detailed statements covering the annual operation of the project area and/or project facilities, including income and expenses and such other information the DEPARTMENT might reasonably require.

i. maintain the premises in such condition as to comply with all federal, state, and local laws which may be applicable, and to make any and all payments required for all taxes, fees, or assessments legally imposed against the project area.

j. erect and maintain a sign on the property which designates this project as one having been constructed with the assistance of the MNRTF. The size, color and design of this sign shall be in accordance with DEPARTMENT specifications.

k. conduct a dedication/ribbon-cutting ceremony as soon as possible after the project is completed and the MNRTF sign is erected within the project area. At least 30 days prior to the dedication/ribbon-cutting ceremony, the DEPARTMENT must be notified in writing of the date, time, and location of the dedication/ribbon-cutting ceremony. GRANTEE shall provide notice of ceremony in the local media. Use of the grant program logo and a brief description of the program are strongly encouraged in public recreation brochures produced by the GRANTEE. At the discretion of the DEPARTMENT, the requirement to conduct a dedication/ribbon-cutting ceremony may be waived.

8. Only eligible costs and expenses incurred toward completion of the project facilities after execution of the Project Agreement shall be considered for reimbursement under the terms of this Agreement. Eligible engineering costs incurred toward completion of the project facilities beginning **January 1, 2021** and throughout the project period are also eligible for reimbursement. Any costs and expenses incurred after the project period shall be the sole responsibility of the GRANTEE.

9. To be eligible for reimbursement, the GRANTEE shall comply with DEPARTMENT requirements. At a minimum, the GRANTEE shall:

   a. Submit a progress report every 180 days during the project period.
   b. Submit complete requests for partial reimbursement when the GRANTEE is eligible to request at least 25 percent of the grant amount and construction contracts have been executed or construction by force account labor has begun.
   c. Submit a complete request for final reimbursement **within 90 days of project completion and no later than 08/31/2023**. If the GRANTEE fails to submit a complete final request for reimbursement by **08/31/2023**, the DEPARTMENT may audit the project costs and expenses and make final payment based on documentation on file as of that date or may terminate this Agreement and require full repayment of grant funds by the GRANTEE.

10. During the project period, the GRANTEE shall obtain prior written authorization from the DEPARTMENT before adding,

deleting or making a significant change to any of the project facilities as proposed. Approval of changes is solely at the discretion of the DEPARTMENT. Furthermore, following project completion, the GRANTEE shall obtain prior written authorization from the DEPARTMENT before implementing a change that significantly alters the project facilities as constructed and/or the project area, including but not limited to discontinuing use of a project facility or making a significant change in the recreational use of the project area. Changes approved by the DEPARTMENT pursuant to this Section may also require prior approval of the BOARD, as determined by the DEPARTMENT.

11. All project facilities constructed or purchased by the GRANTEE under this Agreement shall be placed and used at the project area and solely for the purposes specified in the application and this Agreement.

12. The project area and all facilities provided thereon, as well as the land and water access ways to them, shall be open to the general public at all times on equal and reasonable terms. No individual shall be denied ingress or egress thereto or the use thereof because of sex, race, color, religion, national origin, residence, age, height, weight, familial status, marital status, or disability.

13. Unless an exemption has been authorized by the DEPARTMENT pursuant to this Section, the GRANTEE hereby represents that it possesses fee simple title, free of all liens and encumbrances, to the project area. The fee simple title shall not be subject to: 1) any possibility of reversion or right of entry for condition broken or any other executory limitation which may result in defeasance of title or 2) to any reservation or prior conveyance of coal, oil, gas, sand, gravel or other mineral interests. For any portion of the project area that the GRANTEE does not possess in fee simple title, the GRANTEE hereby represents that it has:

a. Received an exemption from the DEPARTMENT before the execution of this Agreement, and
b. Received prior approval from the DEPARTMENT of a lease and/or easement for any portion of the property not held in fee simple title as indicated in written correspondence from the DEPARTMENT dated _____, and
c. Supplied the DEPARTMENT with an executed copy of the approved lease or easement, and
d. Confirmed through appropriate legal review that the terms of the lease or easement are consistent with GRANTEE'S obligations under this Agreement and will not hinder the GRANTEE'S ability to comply with all requirements of this Agreement. In no case shall the lease or easement tenure be less than 20 years from the date of execution of this Agreement.

14. The GRANTEE shall not allow any encumbrance, lien, security interest, mortgage or any evidence of indebtedness to attach to or be perfected against the project area or project facilities included in this Agreement.

15. None of the project area, nor any of the project facilities constructed under this Agreement, shall be wholly or partially conveyed in perpetuity, either in fee, easement or otherwise, or leased for a term of years or for any other period, nor shall there be any whole or partial transfer of the lease title, ownership, or right of maintenance or control by the GRANTEE except with the written approval and consent of the DEPARTMENT. The GRANTEE shall regulate the use of the project area to the satisfaction of the DEPARTMENT.

16. The assistance provided to the GRANTEE as a result of this Agreement is intended to have a lasting effect on the supply of outdoor recreation, scenic beauty sites, and recreation facilities beyond the financial contribution alone and permanently commits the project area to Michigan's outdoor recreation estate, therefore:

a. The GRANTEE agrees that lands in the project area are being acquired with MNRTF assistance and shall be maintained in public outdoor recreation use in perpetuity. No portion of the project area shall be converted to other than public outdoor recreation use without the approval of the DEPARTMENT. The DEPARTMENT shall approve such conversion only upon such conditions as it deems necessary to assure the substitution by GRANTEE of other outdoor recreation properties of equal or greater market value and of reasonably equivalent usefulness and location. Such substituted land shall become part of the project area and will be subject to all the provisions of this Agreement.
b. Approval of a conversion shall be at the sole discretion of the DEPARTMENT.
c. Before completion of the project, the GRANTEE and the DEPARTMENT may mutually agree to alter the project area through an amendment to this Agreement to provide the most satisfactory public outdoor recreation area.

17. Should title to the lands in the project area or any portion thereof be acquired from the GRANTEE by any other entity through exercise of the power of eminent domain, the GRANTEE agrees that the proceeds awarded to the GRANTEE shall be used

to replace the lands and project facilities affected with outdoor recreation lands and project facilities of equal or greater market value, and of equal or greater usefulness and location. The DEPARTMENT and BOARD shall approve such replacement only upon such conditions as it deems necessary to assure the replacement by GRANTEE of other outdoor recreation properties and project facilities of equal or greater market value and of equal or greater usefulness and location. Such replacement land shall be subject to all the provisions of this Agreement.

18. The GRANTEE acknowledges that:

a. The GRANTEE has examined the project area and has found the property safe for public use or actions will be taken by the GRANTEE before beginning the project to assure safe use of the property by the public, and
b. The GRANTEE is solely responsible for development, operation, and maintenance of the project area and project facilities, and that responsibility for actions taken to develop, operate, or maintain the property is solely that of the GRANTEE, and
c. The DEPARTMENT'S involvement in the premises is limited solely to the making of a grant to assist the GRANTEE in developing the project site.

19. The GRANTEE assures the DEPARTMENT that the proposed State-assisted action will not have a negative effect on the environment and, therefore, an Environmental Impact Statement is not required.

20. The GRANTEE hereby acknowledges that this Agreement does not require the State of Michigan to issue any permit required by law to construct the outdoor recreational project that is the subject of this Agreement. Such permits include, but are not limited to, permits to fill or otherwise occupy a floodplain, and permits required under Parts 301 and 303 of the Natural Resources and Environmental Protection Act, Act 451 of the Public Acts of 1994, as amended. It is the sole responsibility of the GRANTEE to determine what permits are required for the project, secure the needed permits and remain in compliance with such permits.

21. Before the DEPARTMENT will approve plans, specifications, or bid documents; or give approval to the GRANTEE to advertise, seek quotes, or incur costs for this project, the GRANTEE must provide documentation to the DEPARTMENT that indicates either:

a. It is reasonable for the GRANTEE to conclude, based on the advice of an environmental consultant, as appropriate, that no portion of the project area is a facility as defined in Part 201 of the Michigan Natural Resources and Environmental Protection Act, Act 451 of the Public Acts of 1994, as amended;
or
b. If any portion of the project area is a facility, documentation that Department of Environment, Great Lakes and Energy-approved response actions have been or will be taken to make the site safe for its intended use within the project period, and that implementation and long-term maintenance of response actions will not hinder public outdoor recreation use and/or the resource protection values of the project area.

22. If the DEPARTMENT determines that, based on contamination, the project area will not be made safe for the planned recreation use within the project period, or another date established by the DEPARTMENT in writing, or if the DEPARTMENT determines that the presence of contamination will reduce the overall usefulness of the property for public recreation and resource protection, the grant may be cancelled by the DEPARTMENT with no reimbursement made to the GRANTEE.

23. The GRANTEE shall acquire and maintain insurance which will protect the GRANTEE from claims which may arise out of or result from the GRANTEE'S operations under this Agreement, whether performed by the GRANTEE, a subcontractor or anyone directly or indirectly employed by the GRANTEE, or anyone for whose acts may hold them liable. Such insurance shall be with companies authorized to do business in the State of Michigan in such amounts and against such risks as are ordinarily carried by similar entities, including but not limited to public liability insurance, worker's compensation insurance or a program of self-insurance complying with the requirements of Michigan law. The GRANTEE shall provide evidence of such insurance to the DEPARTMENT at its request.

24. Nothing in this Agreement shall be construed to impose any obligation upon the DEPARTMENT to operate, maintain or provide funding for the operation and/or maintenance of any recreational facilities in the project area.

25. The GRANTEE hereby represents that it will defend any suit brought against either party which involves title, ownership, or any other rights, whether specific or general rights, including appurtenant riparian rights, to and in the project area of any lands connected with or affected by this project.

26. The GRANTEE is responsible for the use and occupancy of the premises, the project area and the facilities thereon. The GRANTEE is responsible for the safety of all individuals who are invitees or licensees of the premises. The GRANTEE will defend all claims resulting from the use and occupancy of the premises, the project area and the facilities thereon. The DEPARTMENT is not responsible for the use and occupancy of the premises, the project area and the facilities thereon.

27. Failure by the GRANTEE to comply with any of the provisions of this Agreement shall constitute a material breach of this Agreement.

28. Upon breach of the Agreement by the GRANTEE, the DEPARTMENT, in addition to any other remedy provided by law, may:

    a. Terminate this Agreement; and/or
    b. Withhold and/or cancel future payments to the GRANTEE on any or all current recreation grant projects until the violation is resolved to the satisfaction of the DEPARTMENT; and/or
    c. Withhold action on all pending and future grant applications submitted by the GRANTEE under the Michigan Natural Resources Trust Fund, Land and Water Conservation Fund and Recreation Passport Grant Program; and/or
    d. Require repayment of grant funds already paid to GRANTEE; and/or
    e. Require specific performance of the Agreement.

29. This Agreement may be canceled by the DEPARTMENT, upon 30 days written notice, due to Executive Order, budgetary reduction, other lack of funding, upon request by the GRANTEE, or upon mutual agreement by the DEPARTMENT and GRANTEE. The DEPARTMENT may honor requests for just and equitable compensation to the GRANTEE for all satisfactory and eligible work completed under this Agreement up until 30 days after written notice, upon which time all outstanding reports and documents are due to the DEPARTMENT and the DEPARTMENT will no longer be liable to pay the GRANTEE for any further charges to the grant.

30. The GRANTEE agrees that the benefit to be derived by the State of Michigan from the full compliance by the GRANTEE with the terms of this Agreement is the preservation, protection and net increase in the quality of public outdoor recreation facilities and resources which are available to the people of the State and of the United States and such benefit exceeds to an immeasurable and unascertainable extent the amount of money furnished by the State of Michigan by way of assistance under the terms of this Agreement. The GRANTEE agrees that after final reimbursement has been made to the GRANTEE, repayment by the GRANTEE of grant funds received would be inadequate compensation to the State for any breach of this Agreement. The GRANTEE further agrees therefore, that the appropriate remedy in the event of a breach by the GRANTEE of this Agreement after final reimbursement has been made shall be the specific performance of this Agreement.

31. The GRANTEE shall return all grant money if the project area or project facilities are not constructed, operated or used in accordance with this Agreement.

32. The GRANTEE agrees not to discriminate against an employee or applicant for employment with respect to hire, tenure, terms, conditions, or privileges of employment, or a matter directly or indirectly related to employment, because of religion, race, color, national origin, age, sex, sexual orientation, height, weight, marital status, partisan considerations, or a disability or genetic information that is unrelated to the person's ability to perform the duties of a particular job or position. The GRANTEE further agrees that any subcontract shall contain non-discrimination provisions which are not less stringent than this provision and binding upon any and all subcontractors. A breach of this covenant shall be regarded as a material breach of this Agreement.

33. The DEPARTMENT shall terminate this Agreement and recover grant funds paid if the GRANTEE or any subcontractor, manufacturer, or supplier of the GRANTEE appears in the register compiled by the Michigan Department of Licensing and Regulatory Affairs pursuant to Public Act No. 278 of 1980.

SAMPLE RESOLUTION
(Development)

Upon motion made by _____, seconded by _____, the following Resolution was adopted:

"RESOLVED, that the _____, Michigan, does hereby accept the terms of the Agreement as received from the Michigan Department of Natural Resources, and that the _____ does hereby specifically agree, but not by way of limitation, as follows:

1. To appropriate all funds necessary to complete the project during the project period and to provide _____($_____) dollars to match the grant authorized by the DEPARTMENT.

2. To maintain satisfactory financial accounts, documents, and records to make them available to the DEPARTMENT for auditing at reasonable times.

3. To construct the project and provide such funds, services, and materials as may be necessary to satisfy the terms of said Agreement.

4. To regulate the use of the facility constructed and reserved under this Agreement to assure the use thereof by the public on equal and reasonable terms.

5. To comply with any and all terms of said Agreement including all terms not specifically set forth in the foregoing portions of this Resolution."

The following aye votes were recorded: _____
The following nay votes were recorded: _____

STATE OF MICHIGAN)
) ss
COUNTY OF _____)

I, _____, Clerk of the _____, Michigan, do hereby certify that the above is a true and correct copy of the Resolution relative to the Agreement with the Michigan Department of Natural Resources, which Resolution was adopted by the _____ at a meeting held _____.

_____
Signature

_____
Title

_____
Date

RESOLUTION 2022 - 33
City Council
City of Hart, Michigan
Oceana County

Accept competitive quotes for leaf vacuum and award purchase

WHEREAS, The City of Hart Department of Public Works supports residents each autumn by removing leaves raked to the street; and

WHEREAS, The current leaf vacuum is antiquated and requires constant repairs wasting valuable human resources and time at an increasing cost to the city; and

WHEREAS, The Fiscal Year 2022 budget includes the replacement of the leaf vacuum as a budgeted expense; and

WHEREAS, In order to secure the benefits of efficient self-government and to promote and protect out common interests and welfare, the City Council hereby declares:

NOW THEREFORE BE IT RESOLVED THAT THE CITY COUNCIL

Authorizes the City Manager to sign and execute all documents related to the proposed purchase of a new ODB self-contained trailer debris collector model 750VE for the lowest quoted price of $93,446.51

Furthermore, council hereby declares the existing leaf vacuum as obsolete equipment and authorizes the city manager to work through a pubic bidding system to sell the obsolete vacuum trailer in "AS-IS condition" and sign sales documents in that pursuit.

Moved by _____, supported by _____, and thereafter adopted by the Hart City Council at a regularly scheduled meeting held on August 9, 2022.

7/1/22

DCL SELF-CONTAINED TRAILER DEBRIS COLLECTORS (750VE)
Pricing Effective May 1, 2022

MTECH

DEALER:		CUSTOMER:	
MTech		City of Hart	
Address:	7401 First Place Cleveland, OH 44146	Address:	1010 S. State St. Hart, MI 49420
Contact Name:	Scott Silberzahn	Contact Name:	Brad Whitney
Contact Phone:	616-460-7601	Contact Phone:	231-638-2052

STANDARD INCLUDES

John Deere 4045TFC03 DIESEL Eng. 74 HP Final Tier 4
Standard curb side pick up
25" suction impeller w/ six 3/8" thick T-1 steel blades, **SHREDDER FAN INCLUDED**
Direct Drive with Automotive Style Clutch Engagement
40 gallon polyethylene fuel tank
Electronic Engine Controls w/ Safety shut down
13" clutch assembly w/ 2.25" PTO shaft & safety engagement
Hydraulic hose boom powered by 12v electric/hydraulic pump
16x120" urethane hose w/steel nozzle. Intake ducting pointed towards tongue to achieve 102" Overall Width
Gear driven Hydraulic pump powers 15.2 ton capacity dump hoist, Single side hinge door on box
Boxed perforated radiator screen

STANDARD MISCELLANEOUS FEATURES

Underbody type hoist that dumps to 52 degrees and is power up/down	LED type DOT lights
HD height adjustable pintle eye, 3 bolt-in positions	Rear door mounted strobe
Manual parking jack with drop foot	Electric brakes with break-away actuator

Axle

Heavy Duty Leaf Spring Axle Combined Rating 20,000lbs

Tires

(8) 235/80R16E tires mounted on steel wheels

PAINT

Hopper Standard- **White**, Trailer/Chassis - **Black**
Engine & Blower Skid Assembly - **Grey**

QTY	DESCRIPTION		PRICE
	TRAILER MOUNTED SELF CONTAINED VACUUM DEBRIS COLLECTOR OPTIONS		
1	25 Cubic Yard Trailer Mount Debris Collector - Value Unit	DCL750TM25	$ 90,133.33
		Subtotal Debris Collector Options	**$ 90,133.33**
	ENGINE & BLOWER OPTIONS		
	Fluid Drive coupler in lieu of standard clutch	UU2248XPTOKIT	$ -
	ECO-MODE™ (Compatible with Standard Boom Option)	36OPT	$ -
	Engine Block Heater, 115V (JOHN DEERE DIESEL ONLY)	RE42138	$ -
1	Engine remote oil drain hose	14OPT	$ 463.53
		Subtotal Engine Options	**$ 463.53**
	MISCELLANEOUS OPTIONS		
1	Hydraulic front parking jack in lieu of manual	9OPT	$ 1,868.01
	11 gauge perforated top screens with 3/16" holes (14&20 CYD, NO Bottom Exhst) *2PER	SCL805810P	$ -
1	Remote Electric throttle for engine	19OPT	$ 981.64
	Self cleaning radiator screen (DIESEL ONLY)	1241XZ	$ -
	Remote Electric Clutch for Engine	29OPT	$ -
		Subtotal Miscellaneous Options	**$ 2,849.65**
	SPECIAL PAINT OPTIONS		
	Paint, Special: hopper body custom color (Skid and Engine: Grey)	PPG800	$ -
	Enter Paint Code Below: Special Paint Color: _____ Special Paint Code: _____		
		Subtotal Special Paint	**$ -**

SOR Confirmation Required below

QTY	ACTION	*SPECIAL OPTIONS REQUEST*	Part#	PRICE
			Subtotal Special Options	**$ 0.00**

FREIGHT OPTIONS

1	Factory Freight, Delivery, and Training: No Charge		$ 0.00
		Freight Total	**$ 0.00**

Terms: Place X in Appropriate Box		SHIP TO: NAME *(if different from above)*	
	Net 10	Address:	
X	Net 30		
	Irrevocable Letter of Credit	Contact Name:	
	Other	Contact Phone:	

Due to extreme market volatility and worldwide supply chain issues, all prices and lead times are subject to change without notice. Please confirm current pricing and availability with your MTech sales rep prior to placing your order.

ODB XTREME VAC DEBRIS COLLECTOR PURCHASE ORDER

Quote Total	$93,446.51
Freight	$0.00
TOTAL PURCHASE ORDER AMOUNT	**$93,446.51**

Estimated Lead Time: 60-90 Days ARO

I understand this document is a binding purchase order and is a contract for the purchase of goods. This purchase order can not be amended except in writing by both parties. This agreement constitutes the entire agreement between both parties and there are no other understandings other than those incorporated within.

Signature of Authorized Customer Representative Submitting Purchase Order

Date

Make note of the following: All prices F.O.B ODB Richmond, VA and are subject to change without notice. All pricing is quoted and to be paid in U.S. funds. Payment required before release of MSO. Warranties on chassis and auxiliary engine (if required) are provided by their manufacturer and are not covered by ODB. Dealers are responsible for reviewing, and verifying, all quotes prior to submission in regards to the customers' bid requirements. Write-in options are subject to final approval concerning both structure and price by ODB management. This Electronic Build sheet (EBS) is a communication tool between ODB and its Customers. This EBS is proprietary to ODB and may not be modified or used for any other purpose without the written consent of ODB.

2022/02/28

Brown Equipment Company
2501 S Kentucky Ave
Evansville IN 47714
Ph:800-747-2312
www.brownequipment.net

Vehicle Quote

#Q04885
7/5/2022

Bill To

Ship To

TOTAL

$93,500.00

Sales Rep: Derek DeRoche

Expires	PO #	Quote Information	Shipping Method
8/4/2022			

Item	Description	Qty	Price	Extended Price
ALC-25	AMERICAN ROAD MACHINERY MODEL: ALC-25 25 cu.yd. Debris Hopper 74 HP Kohler Diesel Engine, Tier 4 Final Dual Tandem Axles Safety Oil & Temperature Shutdown Gauges Tach/Hour Meter Fixed Auxiliary Radiator Screen Replaceable Slide-Out Exhaust Screens Replaceable Fan Housing Liners 25" six bladed fan, balanced and stress relieved Heavy-Duty Over Center Clutch Heavy Duty Pick-up Hose Electric Brakes w/breakaway switch and controller Landing Jack Hydraulic Hose Boom Rear Strobe Front Mounted Telescopic Dump Hoist Engine Driven Hydraulics Logan Push Button Clutch Options (not included): -Hydraulic Jack Stand $2,335.00 -Top Mounted Hood Air Deflector $4,300.00 Dual Side Hinged Rear Doors ILO Single Rear Door: N/C	1	$93,500.00	$93,500.00

Subtotal	$93,500.00
Tax (0%)	$0.00
Total	$93,500.00

Q04885


ARM
EXIT
ARM

7/1/22

DCL SELF-CONTAINED TRAILER DEBRIS COLLECTORS
Pricing Effective May 1, 2022

MTECH

DEALER:		CUSTOMER:	
MTech		City of Hart	
Address:	7401 First Place Cleveland, OH 44146	Address:	1010 S. State St. Hart, MI 49420
Contact Name:	Scott Silberzahn	Contact Name:	Brad Whitney
Contact Phone:	616-460-7601	Contact Phone:	231-638-2052

STANDARD INCLUDES

800TM

Kubota WG3800-G-E3 gasoline 4cyl. rated for 87hp
Standard curb side pick up
28" suction impeller w/ six 3/8" thick T-1 steel blades
4 groove power band belt driven
40 gallon polyethylene fuel tank
Electronic Engine Controls w/ Safety shut down
13" clutch assembly w/ 2.25" PTO shaft & safety engagement
Hydraulic hose boom powered by 12v electric/hydraulic pump
16x120" rubber suction hose w/steel nozzle. Straight intake ducting **(Swivel Intake is now an option!)**
Gear driven Hydraulic pump powers 15.2 ton capacity hoist
Boxed perforated radiator screen

STANDARD MISCELLANEOUS FEATURES

Underbody type hoist that dumps to 52 degrees and is power up/down	LED type DOT lights
HD height adjustable pintle eye w/ 3 quick release pins	2 amber LED oval flashers
Manual parking jack with drop foot	Electric brakes with break-away actuator

AXLE

Combined Rating 24,000lbs: 800TM25 & 800TM30	Combined Rating 20,000lbs: 800TM20
Combined Rating 16,000lbs: 800TM14	

TIRES

(4) ST235-85-R16 radial tires mounted on steel wheels (800TM14 only)
(8) 235/80R16E tires mounted on steel wheels (800TM20,25 &30)

PAINT

Hopper Standard- **White**
Engine & Blower Skid Assembly - **Grey**

QTY	DESCRIPTION		PRICE
	TRAILER MOUNTED SELF CONTAINED VACUUM DEBRIS COLLECTOR OPTIONS		
	14 Cubic Yard TRAILER Mount Debris Collector	DCL800TM14	$ -
1	20 Cubic Yard TRAILER Mount Debris Collector	DCL800TM20	$ 90,869.28
	25 Cubic Yard Trailer Mount Debris Collector	DCL800TM25	$ -
	30 Cubic Yard TRAILER Mount Debris Collector	DCL800TM30	$ -
		Subtotal Debris Collector Options	**$ 90,869.28**
	ENGINE & BLOWER OPTIONS		
1	Kubota WSG3800 3.8L Gasoline 87hp@2600rpm	K87P	$ -
	John Deere 4045TFC03 DIESEL Eng. 74 HP Final Tier 4	JD74P	$ -
	Fluid Drive coupler in lieu of standard clutch	UU2248XPTOKIT	$ -
	Poly Bonded Liners	1240XZ	$ -
	ECO-MODE™ (Compatible with Standard Boom Option)	36OPT	$ -
	ECO-MODE™ (Compatible with 2 or 3 Axis Boom Option)	35OPT	$ -
	Engine Block Heater, 115V (JOHN DEERE DIESEL ONLY)	RE42138	$ -
1	Engine remote oil drain hose	14OPT	$ 463.53
		Subtotal Engine Options	**$ 463.53**
	HOPPER OPTIONS		
	BE (bottom exhaust) for 25 & 30 cubic yard units (Perf screens standard)	33OPT	$ -
	BE (bottom exhaust) for 14 & 20 cubic yard units (Perf screens standard)	34OPT	$ -
1	Air Scoop to redirect exhausted air towards rear of unit	7OPT	$ 3,863.24
	Driver's side (street) pick up	*custom # per build (1)*	$ -
		Subtotal Hopper Options	**$ 3,863.24**
	HOSE & BOOM OPTIONS		
	3 Axis (up/down, lft/rght, in/out) hose boom w/ central hydraulics	4OPT	$ -
	Urethane suction hose in lieu of rubber Deduction	LCSDH16120UC	$ -
		Subtotal Boom Options	**$ -**

MISCELLANEOUS OPTIONS				
1	Hydraulic front parking jack in lieu of manual	9OPT	$	1,868.01
	11 gauge perforated top screens with 3/16" holes (25&30 CYD, NO Bottom Exhst) *3PER	SCL805810P	$	-
2	11 gauge perforated top screens with 3/16" holes (14&20 CYD, NO Bottom Exhst) *2PER	SCL805810P	$	1,931.51
	Swivel Intake Duct Flange assembly	43OPT	$	-
	45 deg intake hose flange	LCT61660445	$	-
1	Remote Electric throttle for engine	19OPT	$	981.64
	Self cleaning radiator screen (DIESEL ONLY)	1241XZ	$	-
	Wireless Belly Pack Controls (Only available with 3 Axis boom option)	753XZ	$	-
	28" Impeller **ShredMaster™** Suction Fan	1915XZ	$	-
	30" Impeller **ShredMaster™** Suction Fan	1522XZ	$	-
	30" Impeller Suction Fan	1145XZ	$	-
	Remote Electric Clutch for Engine	29OPT	$	-
		Subtotal Miscellaneous Options	$	4,781.17
SPECIAL PAINT OPTIONS				
	Paint, Special: hopper body custom color (Skid and Engine: Grey)	PPG800	$	-
	Enter Paint Code Below: Special Paint Color: _____ Special Paint Code: _____			
		Subtotal Special Paint	$	-

SOR Confirmation Required below

QTY	ACTION	SPECIAL OPTIONS REQUEST	Part#	PRICE
			Subtotal Special Options	$ 0.00

FREIGHT OPTIONS			
1	Factory Freight, Delivery, and Training: No Charge		$ 0.00
		Freight Total	$ 0.00

Terms: Place X In Appropriate Box		SHIP TO: NAME *(if different from above)*	
	Net 10	**Address:**	
X	Net 30		
	Irrevocable Letter of Credit	**Contact Name:**	
	Other	**Contact Phone:**	

Due to extreme market volatility and worldwide supply chain issues, all prices and lead times are subject to change without notice.
Please confirm current pricing and availability with your MTech sales rep prior to placing your order.

ODB XTREME VAC DEBRIS COLLECTOR PURCHASE ORDER

Quote Total	$99,977.22
Freight	$0.00
TOTAL PURCHASE ORDER AMOUNT	**$99,977.22**

Estimated Lead Time: 60-90 Days ARO

I understand this document is a binding purchase order and is a contract for the purchase of goods. This purchase order can not be amended except in writing by both parties. This agreement constitutes the entire agreement between both parties and there are no other understandings other than those incorporated within.

_____ _____

Signature of Authorized Customer Representative Submitting Purchase Order *Date*

Make note of the following: All prices F. O. B ODB Richmond, VA and are subject to change without notice. All pricing is quoted and to be paid in U.S. funds. Payment required before release of MSO. Warranties on chassis and auxiliary engine (if required) are provided by their manufacturer and are not covered by ODB. Dealers are responsible for reviewing, and verifying, all quotes prior to submission in regards to the customers' bid requirements. Write-in options are subject to final approval concerning both structure and price by ODB management. This Electronic Build sheet (EBS) is a communication tool between ODB and its Customers. This EBS is proprietary to ODB and may not be modified or used for any other purpose without the written consent of ODB.

XTREME VAC by ODB

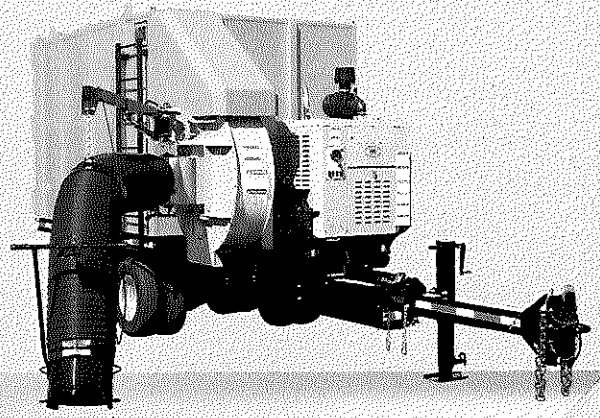

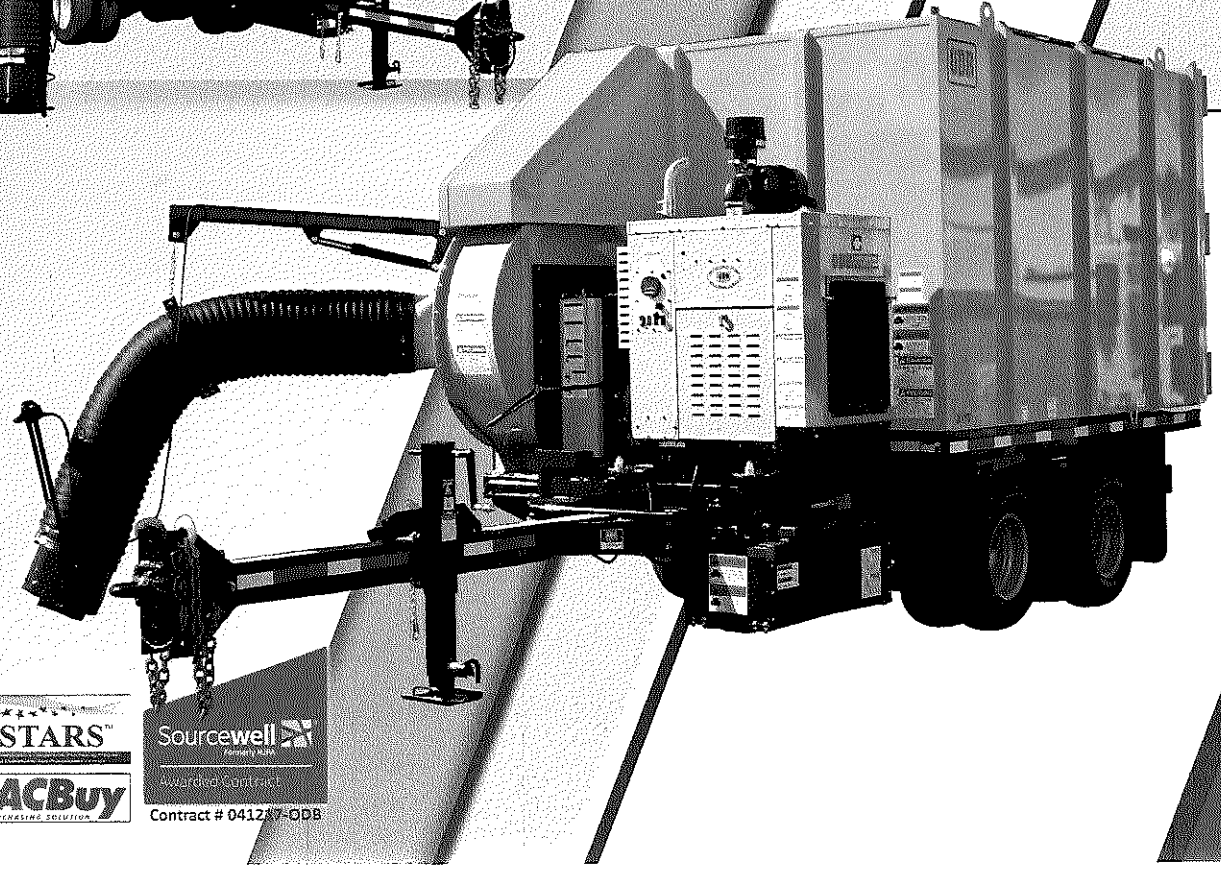

DCL800TM

Kubota 4-cylinder
gasoline engine rated 87HP
- 28" suction impeller
- Hydraulic hose boom
- Tandem rubber Torflex axles
- 16" dia. x 100" rubber intake hose

The **DCL**800TM has the best suction of any unit in it's class. Contact your local Xtreme Vac dealer to order yours today!

*Standard color is white.

*Units may be shown with options.

COSTARS™

HGACBuy
THE SMART PURCHASING SOLUTION

Sourcewell
Awarded Contract

Contract # 041287-ODB

MADE IN AMERICA

Alamo Group

Sold and Serviced by:

MTECH

Call: 1-800-362-0240
Email: sales@mtechcompany.com

Scan using your phone's camera

060619

Specifications

Self-Contained Debris Collector-Trailer Mounted

Engine - Gas

Kubota WSG3800 3.8L 4-cylinder gasoline engine, rated at 87HP, meets EPA T2 & CARB T3 standards.

Engine Controls

Electronic engine controls with safety shut down.

Drive

Belt driven via a 4-groove power band.

Hoist

Gear driven hydraulic pump powers 15.2 ton capacity underbody hoist that dumps to 52 degrees.

Hopper

Container constructed of 11 gauge steel with vented top and side hinge rear doors. Available in 14, 20, 25 & 30 cu.yd. capacities.

Axles

14CY - Dual 3.5" Torflex axles rated at 16,000 lbs.
20CY - Dual 5" Torflex axles rated at 20,000 lbs.
25/30CY-Dual 5" Torflex axles rated at 24,000 lbs.
Equipped w/ electric brakes with break-away actuator.

Tires

14CY - (4) ST235-85R16 radial tires on steel wheels.
20/25/30CY - (8) 235/80R16E tires on steel wheels.

Options

- 3-axis hose boom (up/dn, left/rt, in/out)
- Hydraulic parking jack in lieu of manual
- Fluid drive coupler in lieu of standard clutch
- Remote electric throttle for engine
- Urethane suction hose in lieu of rubber
- Urethane coated liners for blower housing
- Driver's side (street) pick up
- Perforated top screens with 3/16" holes
- Air Scoop or Bottom Exhaust on box
- Rotary self-cleaning radiator screen

Engine - Option

John Deere 4045TFC03 4-cylinder diesel engine rated at 74HP - Final T4

Radiator Screen

Boxed corrugated radiator screen constructed from perforated steel to increase air flow for better cooling.

PTO

13" clutch assembly with 2.25" PTO shaft and safety engagement system.

Hose Boom

Hydraulic hose boom powered by 12v electric / hydraulic pump.

Hose

16" x 100" rubber suction hose with steel nozzle.

Impeller

28" dia. suction impeller with six 3/8" thick T-1 abrasive resistant steel blades. Replaceable 1/4" thick steel liners.

Fuel Tank

40-gallon polyethylene fuel tank.

Pintle Eye

Heavy-duty height adjustable pintle eye with three quick release pins.

Parking Jack

Manual parking jack with drop foot.

Lights

LED type DOT trailer lights. Two amber LED flashers in the rear.

Paint

All components are pre-painted with PPG paint. Hopper - standard white, other custom paint colors available as options.



*Units may be shown with options.



RESOLUTION 2022 - 34
City Council
City of Hart, Michigan
Oceana County

Tentative award of construction contract for wastewater system improvements – Griswold Gravity Sewer

WHEREAS, the City of Hart wishes to construct improvements to its existing wastewater treatment and collection system; and

WHEREAS, the wastewater system improvements project formally adopted on May 25, 2021, will be funded through Michigan's Clean Water State Revolving Fund Program; and

WHEREAS, the City of Hart has sought and received construction bids for the proposed improvements and has received a low bid in the amount of $1,282,282.10 from Hallack Contracting, Inc.; and

WHEREAS, the project engineer, Prein&Newhof, has recommended awarding the contract to the low bidder.

NOW THEREFORE BE IT RESOLVED THAT THE CITY COUNCIL

> *Tentatively awards the contract for construction of the proposed wastewater system improvements Contract 1 – Griswold Gravity Sewer project to Hallack Contracting, Inc., contingent upon successful financial arrangements with the Clean Water State Revolving Fund (CWSRF) Program.*

Moved by _____, supported by _____, and thereafter adopted by the Hart City Council at a regularly scheduled meeting held on August 9, 2022.

Prein&Newhof
Engineers ▪ Surveyors ▪ Environmental ▪ Laboratory

August 4, 2022
2211159

Mr. Rob Splane
City of Hart
407 State Street
Hart, MI 49420

RE: SRF FY 2022 #5722-01
Contract 1 Griswold Gravity Sewer

Dear Mr. Splane:

On Wednesday, August 3rd, the City received five bids for the referenced project. The bids ranged from $1,282,282.10 to $1,774,387.35. Hallack Contracting of Hart, MI submitted the lowest bid at $1,282,282.10. A tabulation of the bids is enclosed for reference.

This project is being financed through the State Revolving Fund (SRF) for items related to the sanitary sewer and the city funding the Polk Road water main. The bids were broken up to track the separate funding portions and the breakdown is as follows:

SRF Eligible	$885,207.60
Ineligible Costs	$397,074.50

We discussed the project with Hallack Contracting. They indicated a good understanding of the project's critical elements such as phasing, schedule, and criticality of the infrastructure being worked on. Schedule is dependent on material delivery dates but at this time the project would likely start in July of 2023. They did not express any concerns with completing the project successfully and on time as long as water main pipe can be delivered in a timely manner.

Hallack has successfully completed projects of similar size and scope with Prein&Newhof and the City of Hart in the past.

If you have any questions, please do not hesitate to ask.

Sincerely,

Prein&Newhof

Matthew R. Hulst, P.E.

Enclosures: Bid Tabulation Sheets

Prein&Newhof
Engineers•Surveyors•Environmental•Laboratory
3355 Evergreen Dr. NE Grand Rapids, MI 49525
t. (616) 364-8491 f. (616) 364-6955

Bid Tabulation

Owner: City of Hart				1st Hallack Contracting Inc 4223 W Polk Rd Hart, MI 49420		2nd Wadel Stabilization 2500 N Oceana Dr Hart, MI 49420		3rd Kamminga & Roodvoets 3435 Broadmoor Ave SE Grand Rapids, MI 49512		4th Schippers Excavating 9829 Lake Michigan Dr West Olive, MI 49460	
Project Title: Contract 1 – Griswold Gravity Sewer											
Bid Date & Time: August 3, 2022 at 1:30pm		Project #: 2211159									
Item No.	Description	Quantity	Unit	Unit Price	Total Amount	Unit Price	Total Amount	Unit Price	Total Amount	Unit Price	Total Amount
SFR Eligible											
1	Mobilization, Max, 10%	1	Lsum	$100,000.00	$100,000.00	$149,000.00	$149,000.00	$150,000.00	$150,000.00	$125,000.00	$125,000.00
2	Traffic Control	1	Lsum	$25,000.00	$25,000.00	$21,000.00	$21,000.00	$10,000.00	$10,000.00	$40,000.00	$40,000.00
3	Minor Traf Devices	1	Lsum	$7,500.00	$7,500.00	$6,000.00	$6,000.00	$25,000.00	$25,000.00	$5,000.00	$5,000.00
4	Dr Structure, Rem	1	Ea	$400.00	$400.00	$600.00	$600.00	$450.00	$450.00	$600.00	$600.00
5	Sanitary Sewer Rem, Less than 24 inch	395	Ft	$5.00	$1,975.00	$9.00	$3,555.00	$13.00	$5,135.00	$7.00	$2,765.00
6	Sanitary Sewer, Abandon, Less than 20 inch	1,600	Ft	$2.50	$4,000.00	$6.00	$9,600.00	$8.00	$12,800.00	$6.00	$9,600.00
7	Storm Sewer, Remove, Less than 24 inch	45	Ft	$5.00	$225.00	$9.00	$405.00	$13.00	$585.00	$10.00	$450.00
8	Curb and Gutter Rem	330	Ft	$15.00	$4,950.00	$10.00	$3,300.00	$10.00	$3,300.00	$6.00	$1,980.00
9	HMA Drive Remove and Replace	150	Syd	$80.00	$12,000.00	$100.00	$15,000.00	$99.00	$14,850.00	$60.00	$9,000.00
10	HMA Surface, Rem	5,700	Syd	$1.50	$8,550.00	$2.20	$12,540.00	$7.50	$42,750.00	$3.00	$17,100.00
11	Erosion Control, Inlet Protection, Fabric Drop	18	Ea	$85.00	$1,530.00	$135.00	$2,430.00	$145.00	$2,610.00	$120.00	$2,160.00
12	Erosion Control, Silt Fence	100	Ft	$2.50	$250.00	$4.00	$400.00	$4.00	$400.00	$3.00	$300.00
13	Machine Grading, Modified	19	Sta	$4,185.00	$79,515.00	$3,000.00	$57,000.00	$2,730.00	$51,870.00	$3,500.00	$66,500.00

Prein&Newhof
Engineers•Surveyors•Environmental•Laboratory
3355 Evergreen Dr. NE Grand Rapids, MI 49525
t. (616) 364-8491 f. (616) 364-6955

Bid Tabulation

Owner: City of Hart				1st Hallack Contracting Inc 4223 W Polk Rd Hart, MI 49420		2nd Wadel Stabilization 2500 N Oceana Dr Hart, MI 49420		3rd Kamminga & Roodvoets 3435 Broadmoor Ave SE Grand Rapids, MI 49512		4th Schippers Excavating 9829 Lake Michigan Dr West Olive, MI 49460	
Project Title: Contract 1 -- Griswold Gravity Sewer											
Bid Date & Time: August 3, 2022 at 1:30pm		Project #: 2211159									
Item No.	Description	Quantity	Unit	Unit Price	Total Amount	Unit Price	Total Amount	Unit Price	Total Amount	Unit Price	Total Amount
28	Sanitary Manhole, Remove	5	Ea	$500.00	$2,500.00	$400.00	$2,000.00	$500.00	$2,500.00	$800.00	$4,000.00
29	Sanitary Manhole, Abandon	5	Ea	$750.00	$3,750.00	$1,170.00	$5,850.00	$500.00	$2,500.00	$900.00	$4,500.00
30	Sanitary Sewer, Wye, 12 inch x 6 inch	12	Ea	$550.00	$6,600.00	$900.00	$10,800.00	$750.00	$9,000.00	$800.00	$9,600.00
31	Sanitary Sewer, Wye, 12 inch x 8 inch	2	Ea	$850.00	$1,700.00	$1,100.00	$2,200.00	$950.00	$1,900.00	$1,350.00	$2,700.00
32	Sanitary Lateral, 6 inch	310	Ft	$38.50	$11,935.00	$77.50	$24,025.00	$135.00	$41,850.00	$70.00	$21,700.00
33	Sanitary Lateral, 8 inch	70	Ft	$47.50	$3,325.00	$103.00	$7,210.00	$225.00	$15,750.00	$90.00	$6,300.00
34	Sanitary Lateral, Connect to Ex.	14	Ea	$225.00	$3,150.00	$300.00	$4,200.00	$250.00	$3,500.00	$500.00	$7,000.00
35	Sanitary Sewer, Connect to Ex. 8"	1	Ea	$625.00	$625.00	$1,000.00	$1,000.00	$300.00	$300.00	$3,000.00	$3,000.00
36	Sewer, Cl E, 15 inch, Tr Det B	8	Ft	$55.00	$440.00	$142.00	$1,136.00	$150.00	$1,200.00	$100.00	$800.00
37	Sewer, Cl E, 12 inch, Tr Det B	54	Ft	$50.00	$2,700.00	$73.00	$3,942.00	$125.00	$6,750.00	$70.00	$3,780.00
38	Dr Structure, 48" Dia	1	Ea	$5,000.00	$5,000.00	$3,400.00	$3,400.00	$4,000.00	$4,000.00	$4,000.00	$4,000.00
39	Structure Tap, 12"	1	Ea	$925.00	$925.00	$920.00	$920.00	$500.00	$500.00	$600.00	$600.00
40	Sewer, Connect to Ex 15"	1	Ea	$1,252.10	$1,252.10	$615.00	$615.00	$750.00	$750.00	$600.00	$600.00
41	Dr Structure Cover, Type B	1	Ea	$1,520.50	$1,520.50	$900.00	$900.00	$750.00	$750.00	$1,000.00	$1,000.00

Prein&Newhof
Engineers•Surveyors•Environmental•Laboratory
3355 Evergreen Dr. NE Grand Rapids, MI 49525
t. (616) 364-8491 f. (616) 364-6955

Bid Tabulation

Owner: City of Hart				1st Hallack Contracting Inc 4223 W Polk Rd Hart, MI 49420		2nd Wadel Stabilization 2500 N Oceana Dr Hart, MI 49420		3rd Kamminga & Roodvoets 3435 Broadmoor Ave SE Grand Rapids, MI 49512		4th Schippers Excavating 9829 Lake Michigan Dr West Olive, MI 49460	
Project Title: Contract 1 – Griswold Gravity Sewer											
Bid Date & Time: August 3, 2022 at 1:30pm		Project #: 2211159									
Item No.	Description	Quantity	Unit	Unit Price	Total Amount	Unit Price	Total Amount	Unit Price	Total Amount	Unit Price	Total Amount
54	Water Main, Bend, 45 Degree, 12 inch	8	Ea	$1,250.00	$10,000.00	$1,430.00	$11,440.00	$1,400.00	$11,200.00	$1,200.00	$9,600.00
55	Water Main, Bend, 90 Degree, 6 inch	2	Ea	$350.00	$700.00	$600.00	$1,200.00	$600.00	$1,200.00	$450.00	$900.00
56	Water Main, Reducer, 16 inch x 12 inch	1	Ea	$1,550.00	$1,550.00	$2,110.00	$2,110.00	$2,200.00	$2,200.00	$1,800.00	$1,800.00
57	Water Main, Sleeve, 12 inch	1	Ea	$1,850.00	$1,850.00	$1,600.00	$1,600.00	$2,400.00	$2,400.00	$2,800.00	$2,800.00
58	Water Main, Sleeve, 10 inch	1	Ea	$2,025.00	$2,025.00	$1,900.00	$1,900.00	$2,000.00	$2,000.00	$2,500.00	$2,500.00
59	Water Main, Valve and Box, 12 inch	2	Ea	$4,150.00	$8,300.00	$4,000.00	$8,000.00	$4,100.00	$8,200.00	$4,000.00	$8,000.00
60	Water Main, Tapping Tee and Valve, 8 inch x 6 inch	2	Ea	$5,750.00	$11,500.00	$5,300.00	$10,600.00	$4,100.00	$8,200.00	$6,000.00	$12,000.00
61	Water Main, Tee, 12 inch x 12 inch x 6 inch	4	Ea	$1,385.00	$5,540.00	$1,650.00	$6,600.00	$1,400.00	$5,600.00	$1,400.00	$5,600.00
62	Water Main, Valve and Box, 6 inch	4	Ea	$1,850.00	$7,400.00	$1,840.00	$7,360.00	$2,100.00	$8,400.00	$1,800.00	$7,200.00
63	Water Main, Reducer, 12 inch x 10 inch	1	Ea	$985.00	$985.00	$2,320.00	$2,320.00	$1,600.00	$1,600.00	$1,450.00	$1,450.00
63	Water Main, Plug, 8 inch	1	Ea	$1,500.00	$1,500.00	$630.00	$630.00	$650.00	$650.00	$800.00	$800.00
64	Water Main, Cap, 6 inch	2	Ea	$250.00	$500.00	$430.00	$860.00	$625.00	$1,250.00	$400.00	$800.00
65	Valve Box, Remove	7	Ea	$150.00	$1,050.00	$290.00	$2,030.00	$300.00	$2,100.00	$800.00	$5,600.00
66	Valve Box, Abandon	1	Ea	$150.00	$150.00	$220.00	$220.00	$300.00	$300.00	$200.00	$200.00

Prein&Newhof
Engineers•Surveyors•Environmental•Laboratory
3355 Evergreen Dr. NE Grand Rapids, MI 49525
t. (616) 364-8491 f. (616) 364-6955

Bid Tabulation

Owner: City of Hart				1st		2nd		3rd		4th	
Project Title: Contract 1 – Griswold Gravity Sewer				Hallack Contracting Inc 4223 W Polk Rd Hart, MI 49420		Wadel Stabilization 2500 N Oceana Dr Hart, MI 49420		Kamminga & Roodvoets 3435 Broadmoor Ave SE Grand Rapids, MI 49512		Schippers Excavating 9829 Lake Michigan Dr West Olive, MI 49460	
Bid Date & Time: August 3, 2022 at 1:30pm		Project #: 2211159									
Item No.	Description	Quantity	Unit	Unit Price	Total Amount	Unit Price	Total Amount	Unit Price	Total Amount	Unit Price	Total Amount
81	Curb and Gutter Rem	230	Ft	$15.00	$3,450.00	$10.00	$2,300.00	$10.00	$2,300.00	$7.00	$1,610.00
82	Pavt, Rem	85	Syd	$25.00	$2,125.00	$9.00	$765.00	$12.00	$1,020.00	$8.00	$680.00
83	HMA Surface, Rem	1,050	Syd	$1.50	$1,575.00	$4.00	$4,200.00	$7.50	$7,875.00	$3.00	$3,150.00
84	Driveway, Nonreinf Conc, 6 inch	85	Syd	$100.00	$8,500.00	$50.00	$4,250.00	$65.00	$5,525.00	$75.00	$6,375.00
85	HMA Drive Remove and Replace	120	Syd	$80.00	$9,600.00	$100.00	$12,000.00	$99.00	$11,880.00	$60.00	$7,200.00
86	Aggregate Base, 8 inch, Modified	1,050	Syd	$12.00	$12,600.00	$17.60	$18,480.00	$17.50	$18,375.00	$16.00	$16,800.00
87	HMA, 5EML	135	Ton	$107.50	$14,512.50	$109.00	$14,715.00	$109.11	$14,729.85	$146.00	$19,710.00
88	HMA, 4EML	135	Ton	$107.50	$14,512.50	$106.00	$14,310.00	$106.24	$14,342.40	$134.00	$18,090.00
89	HMA, 3EML	135	Ton	$107.50	$14,512.50	$105.00	$14,175.00	$105.41	$14,230.35	$145.00	$19,575.00
90	Pavt Mrkg, Polyurea, 6 inch, White	1,090	Ft	$1.30	$1,417.00	$1.30	$1,417.00	$1.30	$1,417.00	$1.40	$1,526.00
91	Pavt Mrkg, Polyurea, 4 inch, Yellow	100	Ft	$1.20	$120.00	$1.20	$120.00	$1.20	$120.00	$1.30	$130.00
92	Turf Restoration, Water Main	11.0	Sta	$1,000.00	$11,000.00	$500.00	$5,500.00	$750.00	$8,250.00	$1,800.00	$19,800.00
			SRF Ineligible Subtotal:		$397,074.50		$411,467.00		$426,188.60		$483,046.00
			Total Bid		$1,282,282.10		$1,508,420.00		$1,534,828.85		$1,649,586.00

Prein&Newhof
Engineers•Surveyors•Environmental•Laboratory
3355 Evergreen Dr. NE Grand Rapids, MI 49525
t. (616) 364-8491 f. (616) 364-6955

Bid Tabulation

Owner: City of Hart				5th
Project Title: Contract 1 – Griswold Gravity Sewer				Jackson-Merkey Contractors 3430 Lund Avenue Muskegon, MI 49442
Bid Date & Time: August 3, 2022 at 1:30pm	Project #: 2211159			

Item No.	Description	Quantity	Unit	Unit Price	Total Amount
14	Aggregate Base, 8 inch, Modified	5,700	Syd	$13.20	$75,240.00
15	HMA, 5EML	555	Ton	$96.10	$53,335.50
16	HMA, 4EML	690	Ton	$92.95	$64,135.50
17	HMA, 3EML	135	Ton	$105.45	$14,235.75
18	Curb and Gutter, Conc. Det F4	330	Ft	$36.45	$12,028.50
19	Turf Restoration	6	Sta	$3,267.00	$19,602.00
20	Pavt Mrkg, Polyurea, Lt Turn Arrow Sym	1	Ea	$245.00	$245.00
21	Pavt Mrkg, Polyurea, 4 inch, Yellow	1,900	Ft	$1.20	$2,280.00
22	Pavt Mrkg, Polyurea, 6 inch, White	800	Ft	$1.30	$1,040.00
23	Pavt Mrkg, Polyurea, 24 inch, Stop Bar, White	30	Ft	$35.00	$1,050.00
24	Sanitary Sewer, 8", Tr Det B	50	Ft	$159.50	$7,975.00
25	Sanitary Sewer, 12", Tr Det B	1,900	Ft	$183.50	$348,650.00
26	Sanitary Manhole, 48 inch Dia	9	Ea	$10,740.00	$96,660.00
27	Sanitary Doghouse Manhole, 48 inch Dia	1	Ea	$20,660.00	$20,660.00

Prein&Newhof
Engineers•Surveyors•Environmental•Laboratory
3355 Evergreen Dr. NE Grand Rapids, MI 49525
t. (616) 364-8491 f. (616) 364-6955

Bid Tabulation

Owner: City of Hart				5th	
Project Title: Contract 1 -- Griswold Gravity Sewer				Jackson-Merkey Contractors 3430 Lund Avenue Muskegon, MI 49442	
Bid Date & Time: August 3, 2022 at 1:30pm		Project #: 2211159			
Item No.	Description	Quantity	Unit	Unit Price	Total Amount
42	Water Main, DI, 8 inch, Tr Det G	35	Ft	$128.50	$4,497.50
43	Water Main, DI, 12 inch, Tr Det G	345	Ft	$156.50	$53,992.50
44	Water Main, Bend, 45 Degree, 8 inch	2	Ea	$1,098.00	$2,196.00
45	Water Main, Sleeve, 8 inch	1	Ea	$4,759.00	$4,759.00
46	Water Main, Tee, 12 inch x 12 inch x 8 inch	1	Ea	$3,161.00	$3,161.00
47	Water Main, Tee, 12 inch x 12 inch x 12 inch	2	Ea	$3,492.00	$6,984.00
48	Water Main, Plug, 12 inch	1	Ea	$1,521.00	$1,521.00
49	Water Main, Valve and Box, 8 inch	1	Ea	$2,971.00	$2,971.00
50	Water Main, Valve and Box, 12 inch	1	Ea	$5,144.00	$5,144.00
		SRF Eligible Subtotal:			$1,262,228.85
SRF Ineligible					
51	Water Main, DI, 6 inch, Tr Det G	30	Ft	$117.50	$3,525.00
52	Water Main, DI, 10 inch Tr Det G	5	Ft	$337.00	$1,685.00
53	Water Main, DI, 12 inch, Tr Det G	1,200	Ft	$156.50	$187,800.00

Prein&Newhof
Engineers•Surveyors•Environmental•Laboratory
3355 Evergreen Dr. NE Grand Rapids, MI 49525
t. (616) 364-8491 f. (616) 364-6955

Bid Tabulation

Owner: City of Hart				5th
Project Title: Contract 1 -- Griswold Gravity Sewer				Jackson-Merkey Contractors 3430 Lund Avenue Muskegon, MI 49442
Bid Date & Time: August 3, 2022 at 1:30pm		Project #: 2211159		
Item No.	Description	Quantity	Unit	Unit Price	Total Amount
67	Hydrant, Rem	3	Ea	$762.50	$2,287.50
68	Hydrant	6	Ea	$5,298.00	$31,788.00
69	Bollard	2	Ea	$2,000.00	$4,000.00
70	Water Main, Rem	20	Ft	$22.75	$455.00
71	Linestop, 16"	1	Ea	$14,810.00	$14,810.00
72	Water Service, Corporation Stop, 1 inch	5	Ea	$675.00	$3,375.00
73	Water Service, Corporation Stop, 2 inch	1	Ea	$2,000.00	$2,000.00
74	Water Service, Curb Stop and Box, 1 inch	5	Ea	$650.00	$3,250.00
75	Water Service, Curb Stop and Box, 2 inch	1	Ea	$2,000.00	$2,000.00
76	Water Service, 1 inch	650	Ft	$60.00	$39,000.00
77	Water Service, 2 inch	30	Ft	$85.00	$2,550.00
78	Water Service, Material Verification	5	Ea	$750.00	$3,750.00
79	Water Service, Connect to Ex	6	Ea	$585.00	$3,510.00
80	Water Service Restoration, Private	5	Ea	$200.00	$1,000.00

RESOLUTION 2022 - 35
City Council
City of Hart, Michigan
Oceana County

Tentative award of construction contract for wastewater system improvements – Riverside and Griswold Lift Stations

WHEREAS, the City of Hart wishes to construct improvements to its existing wastewater treatment and collection system; and

WHEREAS, the wastewater system improvements project formally adopted on May 25, 2021, will be funded through Michigan's Clean Water State Revolving Fund Program; and

WHEREAS, the City of Hart has sought and received construction bids for the proposed improvements and has received a low bid in the amount of $393,900.00 from Wadel Stabilization; and

WHEREAS, the project engineer, Prein&Newhof, has recommended awarding the contract to the low bidder.

NOW THEREFORE BE IT RESOLVED THAT THE CITY COUNCIL

> *Tentatively awards the contract for construction of the proposed wastewater system improvements Contract 2 – Riverside & Griswold Lift Stations project to Wadel Stabilization, Inc., contingent upon successful financial arrangements with the Clean Water State Revolving Fund (CWSRF) Program*

Moved by _____, supported by _____, and thereafter adopted by the Hart City Council at a regularly scheduled meeting held on August 9, 2022.

Prein&Newhof
Engineers ▪ Surveyors ▪ Environmental ▪ Laboratory

August 4, 2022
2211159

Mr. Rob Splane
City of Hart
407 State Street
Hart, MI 49420

RE: SRF FY 2022 #5722-01
Contract 2 Riverside and Griswold Lift Stations

Dear Mr. Splane:

On Wednesday, August 3rd, the City received three bids for the referenced project. The bids ranged from $393,900.00 to $567,495.00. Wadel Stabilization of Hart, MI submitted the lowest bid at $393,900.00. A tabulation of the bids is enclosed for reference.

We discussed the project with Wadel Stabilization. They indicated a good understanding of the project's critical elements material procurement, schedule, maintaining service and the site constraints. Schedule is dependent on material delivery dates but at this time the project would likely start in the fall of 2023 based on current material lead times. They did not express any concerns with completing the project successfully and on time as long as materials can be delivered in a timely manner.

Wadel has successfully completed lift station projects of similar size and scope with Prein&Newhof in the past. Following review of the bid and confirmation from Wadel they did list the wrong breakdown between the Griswold Lift Station and Riverside Lift Station on the bid document. They flipped the costs, and the corrected breakdown is $358,200.00 for the Riverside Lift Station and $35,700.00 for the Griswold Lift Station. That error does not change the bid total.

If you have any questions, please do not hesitate to ask.

Sincerely,

Prein&Newhof

Matthew R. Hulst, P.E.

Enclosures: Bid Tabulation Sheets

Prein&Newhof
Engineers•Surveyors•Environmental•Laboratory
3355 Evergreen Dr. NE Grand Rapids, MI 49525
t. (616) 364-8491 f. (616) 364-6955

Bid Tabulation

Owner: City of Hart Project Title: Contract No. 2 - Riverside & Griswold Lift Stations Bid Date & Time: August 3, 2022 at 1:30pm — Project #: 2211159	1st Wadel Stabilization 2500 N Oceana Dr Hart,MI 49420	2nd Kamminga & Roodvoets 3435 Broadmoor Ave Grand Rapids, MI 49512	3rd Jackson-Merkey Contractors 3430 Lund Ave Muskegon, MI 49442
BID SUMMARY			
Base Bid	$393,900.00	$458,500.00	$567,495.00
SUBCONTRACTORS			
Site Work/Underground	Wadel Stabilization	K&R	Jackson-Merkey Contractors
Tree Clearing	TBD	K&R	Jackson-Merkey Contractors
Concrete	Wadel Stabilization	K&R	L&O Consttuction
Mechanical	Wadel Stabilization	K&R	Jackson-Merkey Contractors
Painting	Wadel Stabilization	DCD	Jackson-Merkey Contractors
Electrical	DVT Electric	DVT	DVT Electric
Integration	Kennedy Industries	Kennedy Industries	Kennedy Industries
Asphalt Paving	Asphalt Paving	API	Asphalt Paving
Restoration	Wadel Stabilization	K&R	Jackson-Merkey Contractors
PROJECT BREAKDOWN			
1. Riverside Lift Station	$35,700.00	$411,600.00	$517,495.00
2. Griswold Lift Station	$358,200.00	$46,900.00	$50,000.00
MAJOR EQUIPMENT			
1 Submersible Pumps (Section 43 21 39)			
Base Bid: Flygt	$11,716.00	$12,418.96	$11,716.00
Alternate:			
2 Plug Valves (Section 40 05 51)			
Base Bid: DeZurik	$3,790.00	$4,017.40	$3,790.00
Alternate:			
3 Swing Check Valves (Section 40 05 51)			
Base Bid: APCO or Kennedy	$6,136.00	$6,504.16	$6,136.00

RESOLUTION 2022 - 36
City Council
City of Hart, Michigan
Oceana County

Tentative award of construction contract for wastewater system improvements – Storage Lagoon / Rapid Infiltration Basin Repair

WHEREAS, the City of Hart wishes to construct improvements to its existing wastewater treatment and collection system; and

WHEREAS, the wastewater system improvements project formally adopted on May 25, 2021, will be funded through Michigan's Clean Water State Revolving Fund Program; and

WHEREAS, the City of Hart has sought and received construction bids for the proposed improvements and has received a low bid in the amount of $1,177,500.00 from Greenscape General Contracting; and

WHEREAS, the project engineer, Prein&Newhof, has recommended awarding the contract to the low bidder.

NOW THEREFORE BE IT RESOLVED THAT THE CITY COUNCIL

> *Tentatively awards the contract for construction of the proposed wastewater system improvements Contract 3 – Storage Lagoon and Rapid Infiltration Basin Repair project to Greenscape General Contracting, contingent upon successful financial arrangements with the Clean Water State Revolving Fund (CWSRF) Program.*

Moved by _____, supported by _____, and thereafter adopted by the Hart City Council at a regularly scheduled meeting held on August 9, 2022.

Prein&Newhof
Engineers ▪ Surveyors ▪ Environmental ▪ Laboratory

August 4, 2022
2211159

Mr. Rob Splane
City of Hart
407 State Street
Hart, MI 49420

RE: SRF FY 2022 #5722-01
Contract 3 Lagoon Berm and Rapid Infiltration Basin (RIB) Repair

Dear Mr. Splane:

On Wednesday, August 3rd, the City received three bids for the referenced project. The bids ranged from $1,177,500.00 to $3,326,900.00. Greenscape General Contracting of Lake, MI submitted the lowest bid at $1,177,500.00. A tabulation of the bids is enclosed for reference.

We discussed the project with Greenscape. They indicated a good understanding of the project's critical elements, schedule, coordinating with plant operations, and clay fill requirements. They indicated they have located a source for the required clay and have included all portions of the scope in their bid. They intend to start on lagoon 5 repairs this fall with RIB repairs being completed summer of 2023 and the remaining lagoon repairs in the fall of 2023 following completion of the Griswold Forcemain project. They did not express any concerns with completing the project successfully and on time.

We have checked into past projects and references of Greenscape. Their references indicated that Greenscape is capable and has completed similar projects in scale and scope successfully.

If you have any questions, please do not hesitate to ask.

Sincerely,

Prein&Newhof

Matthew R. Hulst, P.E.

Enclosures: Bid Tabulation Sheets

Prein&Newhof
Engineers•Surveyors•Environmental•Laboratory
3355 Evergreen Dr. NE Grand Rapids, MI 49525
t. (616) 364-8491 f. (616) 364-6955

Bid Tabulation

Owner: City of Hart				1st		2nd		3rd	
Project Title: Contract No. 3 – Storage Lagoon and Rapids Infiltration Basin (RIB) Repair				Greenscape General Contracting PO Box 133 Lake, MI 48632		Hallack Contracting 4223 W Polk Rd Hart, MI 49420		Kamminga & Roodvoets 3435 Broadmoor Ave SE Grand Rapids, MI 49512	
Bid Date & Time: August 3, 2022 at 1:30pm		Project #: 2211159							
Item No.	Description	Quantity	Unit	Unit Price	Total Amount	Unit Price	Total Amount	Unit Price	Total Amount
1	Lagoon 2 - Concrete/Asphalt Rubble Removal	1,200.0	TONS	$25.00	$30,000.00	$4.98	$5,976.00	$24.50	$29,400.00
2	Storage Lagoon Berm Repair	1.0	LSUM	$942,500.00	$942,500.00	$1,044,000.00	$1,044,000.00	$2,947,500.00	$2,947,500.00
3	RIB Rehabilitation	1.0	LSUM	$180,000.00	$180,000.00	$265,000.00	$265,000.00	$325,000.00	$325,000.00
4	Asbestos Removal Allowance	1.0	LSUM	$25,000.00	$25,000.00	$25,000.00	$25,000.00	$25,000.00	$25,000.00
			Total Bid		$1,177,500.00		$1,339,976.00		$3,326,900.00

RESOLUTION 2022 - 34
City Council
City of Hart, Michigan
Oceana County

Tentative award of construction contract for wastewater system improvements – Griswold Gravity Sewer

WHEREAS, the City of Hart wishes to construct improvements to its existing wastewater treatment and collection system; and

WHEREAS, the wastewater system improvements project formally adopted on May 25, 2021, will be funded through Michigan's Clean Water State Revolving Fund Program; and

WHEREAS, the City of Hart has sought and received construction bids for the proposed improvements and has received a low bid in the amount of $1,282,282.10 from Hallack Contracting, Inc.; and

WHEREAS, the project engineer, Prein&Newhof, has recommended awarding the contract to the low bidder.

NOW THEREFORE BE IT RESOLVED THAT THE CITY COUNCIL

> *Tentatively awards the contract for construction of the proposed wastewater system improvements Contract 1 – Griswold Gravity Sewer project to Hallack Contracting, Inc., contingent upon successful financial arrangements with the Clean Water State Revolving Fund (CWSRF) Program.*

Moved by _____, supported by _____, and thereafter adopted by the Hart City Council at a regularly scheduled meeting held on August 9, 2022.

RESOLUTION 2022 - 35
City Council
City of Hart, Michigan
Oceana County

Tentative award of construction contract for wastewater system improvements – Riverside and Griswold Lift Stations

WHEREAS, the City of Hart wishes to construct improvements to its existing wastewater treatment and collection system; and

WHEREAS, the wastewater system improvements project formally adopted on May 25, 2021, will be funded through Michigan's Clean Water State Revolving Fund Program; and

WHEREAS, the City of Hart has sought and received construction bids for the proposed improvements and has received a low bid in the amount of $393,900.00 from Wadel Stabilization; and

WHEREAS, the project engineer, Prein&Newhof, has recommended awarding the contract to the low bidder.

NOW THEREFORE BE IT RESOLVED THAT THE CITY COUNCIL

> *Tentatively awards the contract for construction of the proposed wastewater system improvements Contract 2 – Riverside & Griswold Lift Stations project to Wadel Stabilization, Inc., contingent upon successful financial arrangements with the Clean Water State Revolving Fund (CWSRF) Program*

Moved by _____, supported by _____, and thereafter adopted by the Hart City Council at a regularly scheduled meeting held on August 9, 2022.

RESOLUTION 2022 - 36
City Council
City of Hart, Michigan
Oceana County

Tentative award of construction contract for wastewater system improvements – Storage Lagoon / Rapid Infiltration Basin Repair

WHEREAS, the City of Hart wishes to construct improvements to its existing wastewater treatment and collection system; and

WHEREAS, the wastewater system improvements project formally adopted on May 25, 2021, will be funded through Michigan's Clean Water State Revolving Fund Program; and

WHEREAS, the City of Hart has sought and received construction bids for the proposed improvements and has received a low bid in the amount of $1,177,500.00 from Greenscape General Contracting; and

WHEREAS, the project engineer, Prein&Newhof, has recommended awarding the contract to the low bidder.

NOW THEREFORE BE IT RESOLVED THAT THE CITY COUNCIL

> *Tentatively awards the contract for construction of the proposed wastewater system improvements Contract 3 – Storage Lagoon and Rapid Infiltration Basin Repair project to Greenscape General Contracting, contingent upon successful financial arrangements with the Clean Water State Revolving Fund (CWSRF) Program.*

Moved by _____, supported by _____, and thereafter adopted by the Hart City Council at a regularly scheduled meeting held on August 9, 2022.

Sec. 4.1. Regular Meetings of the Council.

Regular meetings of the Council shall be held at least twice in each calendar month commencing at 7:30 p.m. at the City Hall. If any time set by resolution of the Council for holding of a regular meeting of the Council shall be a holiday, then such regular meeting shall be held on the next following secular day which is not a holiday or on such other day as may be set by the Council.

City of Hart
407 S. State St.
Hart, MI 49420

BOARDS – COMMITTEES - COMMISSIONS
APPLICATION FOR APPOINTMENT - REAPPOINTMENT TO
SERVE ON CITY ADVISORY BOARDS – COMMITTEES - COMMISSIONS

_____Power Board	_____Planning Commission
_____Water/BioPure Board	_____City Council
_____Hart Lake Improvement Board	_____Zoning Board of Appeals
_____Housing Board of Review	_____Neglected Properties Board
_____Park Committee	_____TIFA
_x_ Other Fire Command B.	_____Hart Economic & Redevelopment Team H.E.A.R.T.

PLEASE CHECK OFF THE BOARDS/COMMITTEES/COMMISSIONS YOU ARE INTERESTED IN SERVING ON.

Name: John R Williams Home Phone: 231-742-0601

Home Address: 117 Creek Dr. Hart MI. 49420

Employer Address: Retired Coastal Sea.

Work Phone: _____ Cell Phone: 231-742-0601

Email Address: JWILLIAMS0601@Charter.Net

What special experience, education or interest do you have for serving on each of the board(s), committees(s), commissions(s) you selected?

I have been a life long resident of the County and was a member of Hart Area Fire Department for 25 years.

What other board(s), committee(s), and commission do you currently serve on or have served on in the past?

Golden Township Board of Review

Signature JR Williams Date: 8/3/2022

Please return completed application to:

City of Hart
Rob Splane, City Manager
407 S. State St.
Hart, Michigan 49420
Fax: 231-873-0100

City use only:
Date of Approval: _____